SCM2 Straight Probe Drawing
20 T 34 mm bore
3He Insert and Variable Temp Insert
250mK< T < 300K

All dimensions in inches
Scale: None

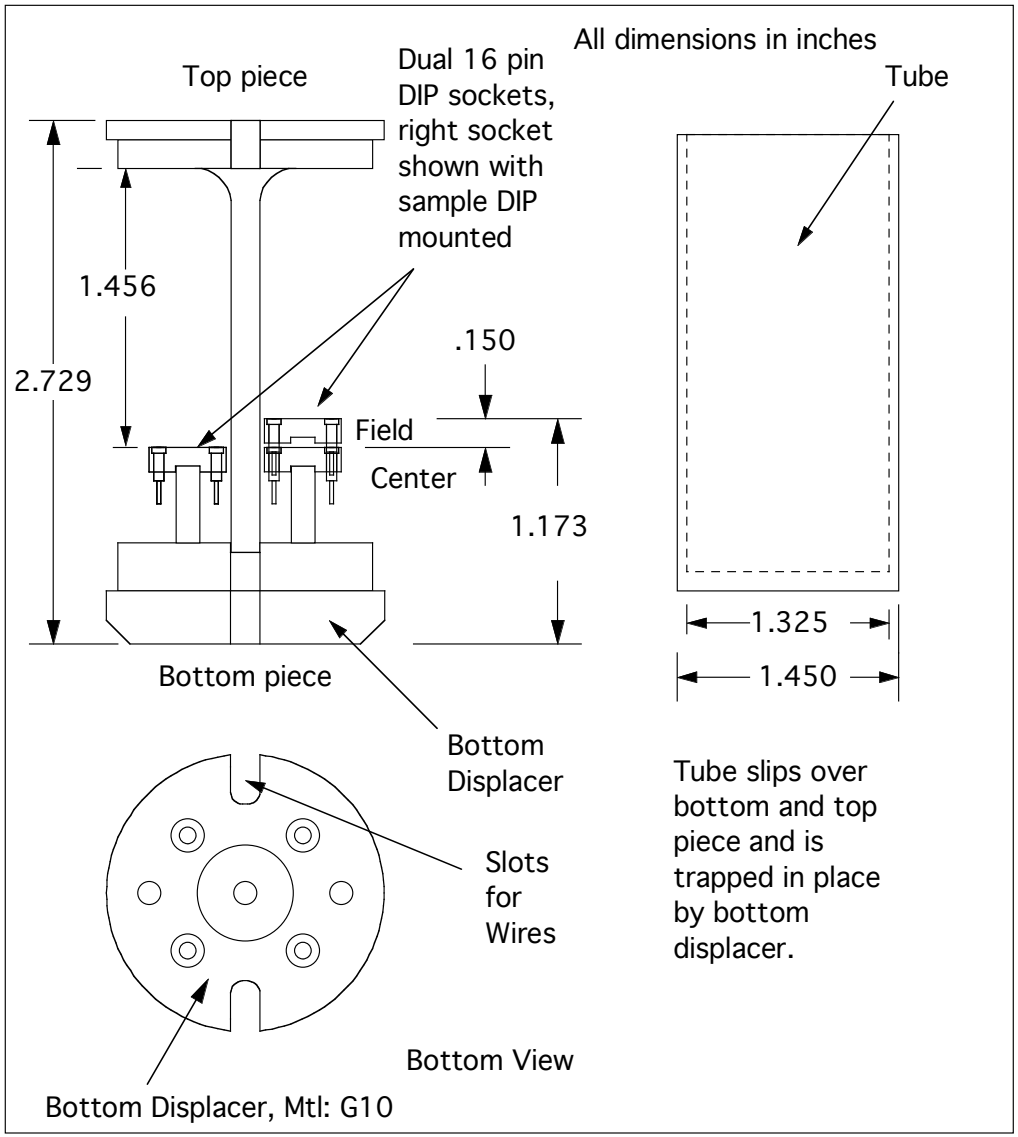

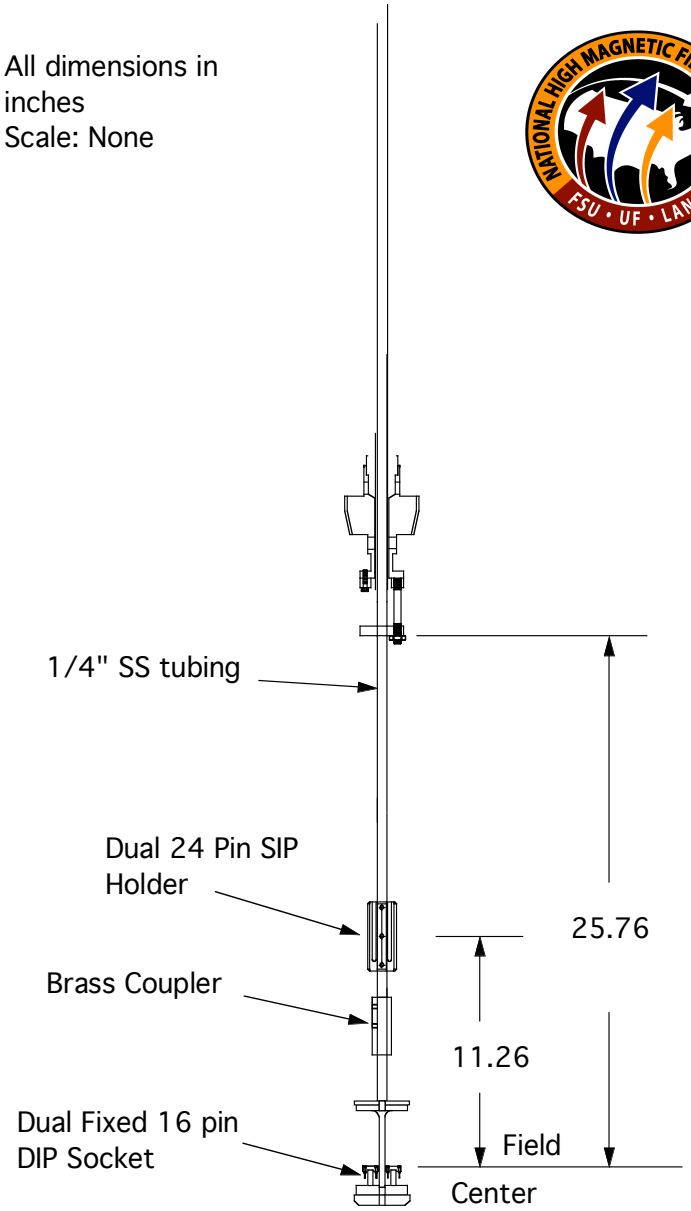

Wiring available: Standard Probe
16 twisted pair
4 S1 coax