SCM1Straight Probe Drawing
20 T 52 mm bore
Top Loading into mixture dilution refrigerator
20 mK< T < 900 mK

Scale= 1:5
All dimensions in inches

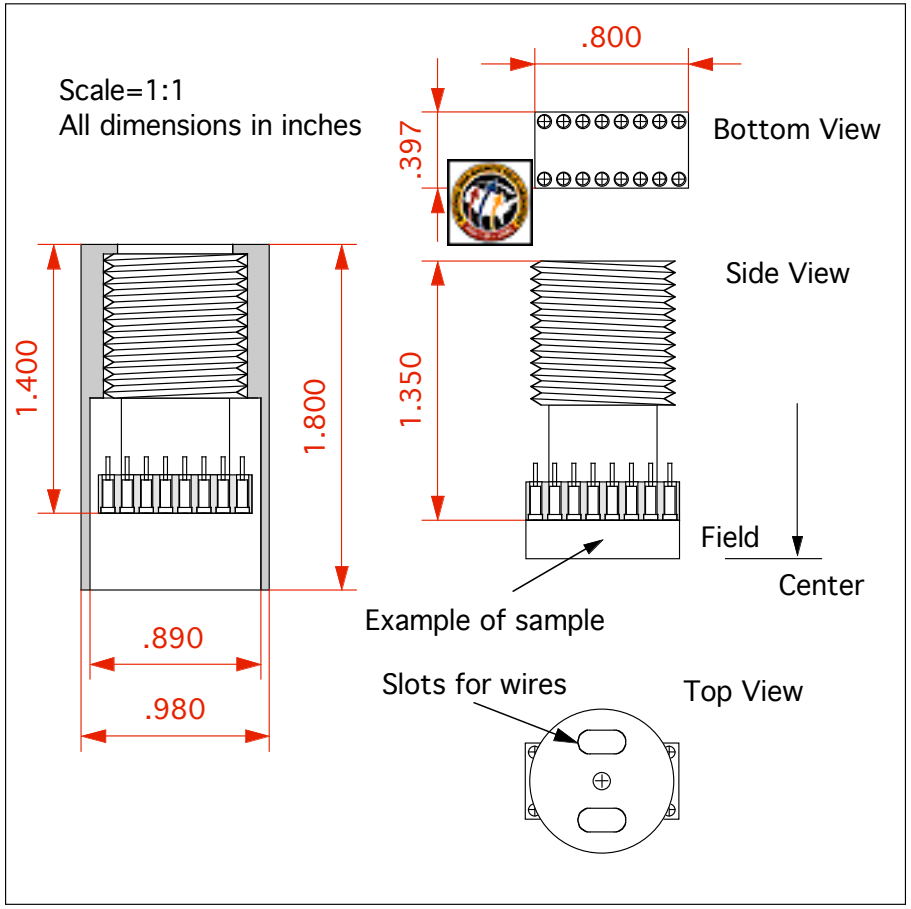

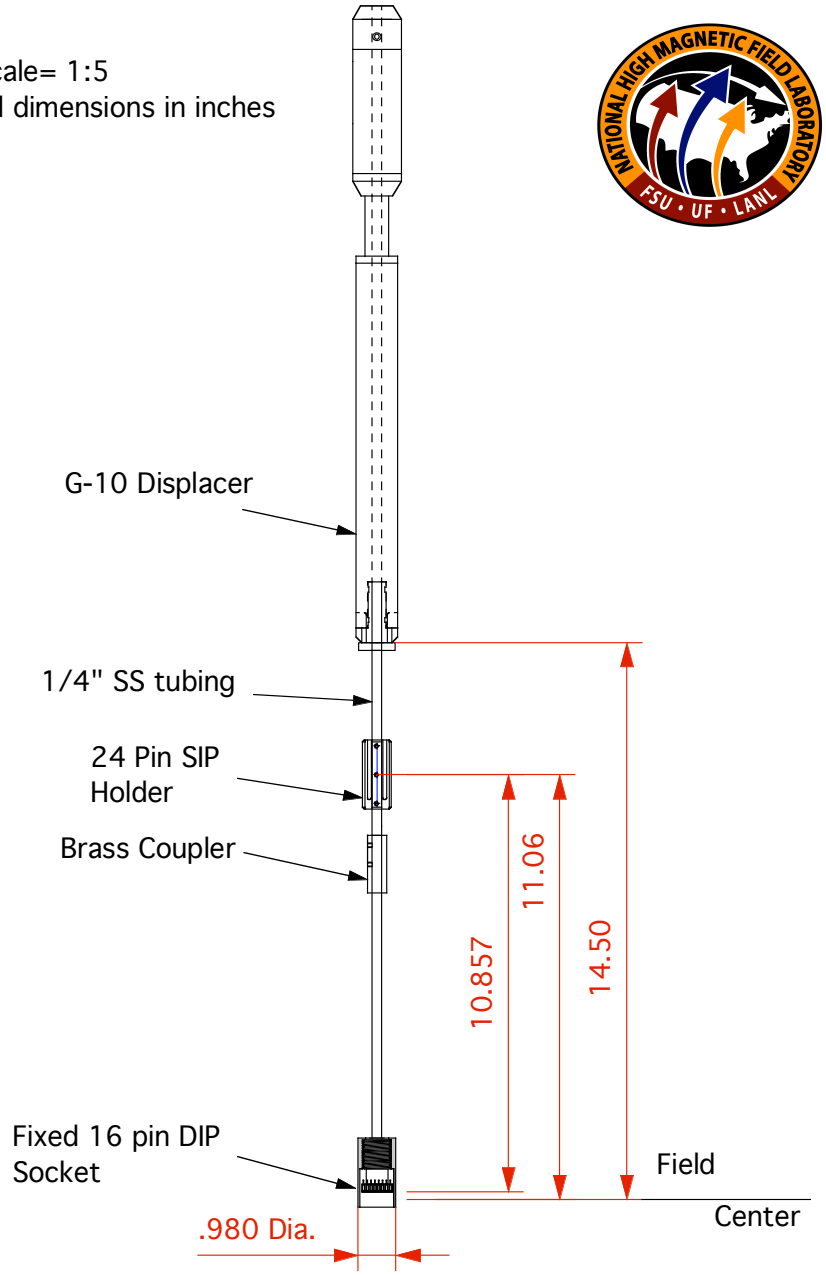

Wiring available: Standard Probe
12 twisted pair
2 S1 coax