SCM1 Rotating Probe Drawing
20 T 52 mm bore
Top Loading into mixture dilution refrigerator
20 mK< T < 900 mK

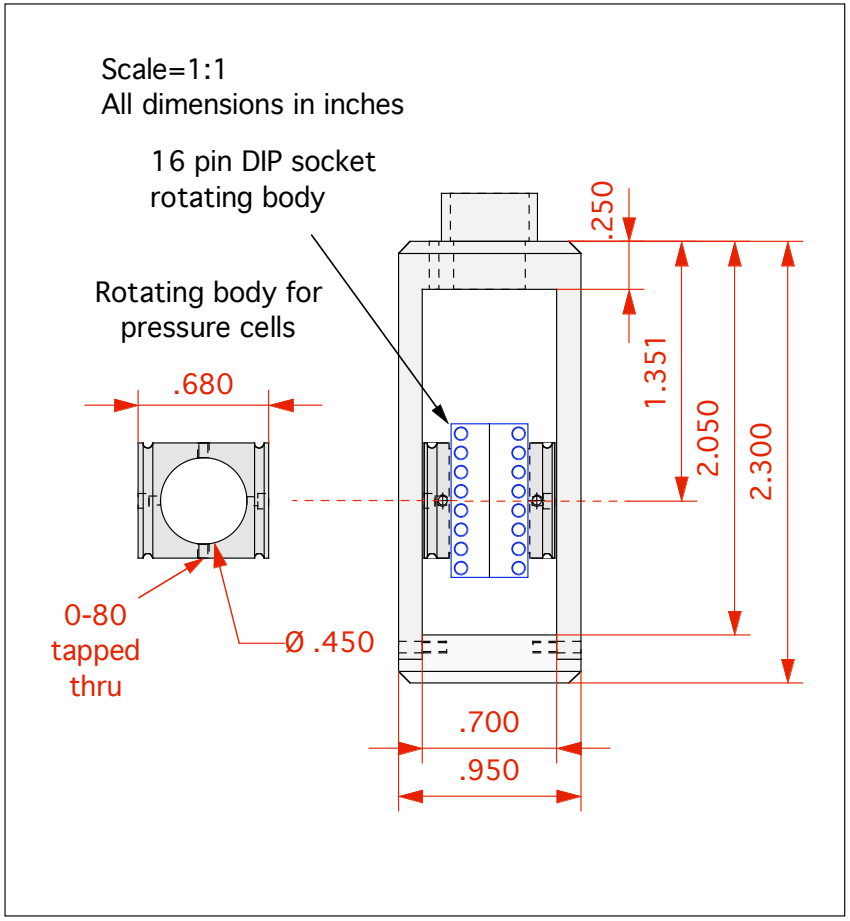

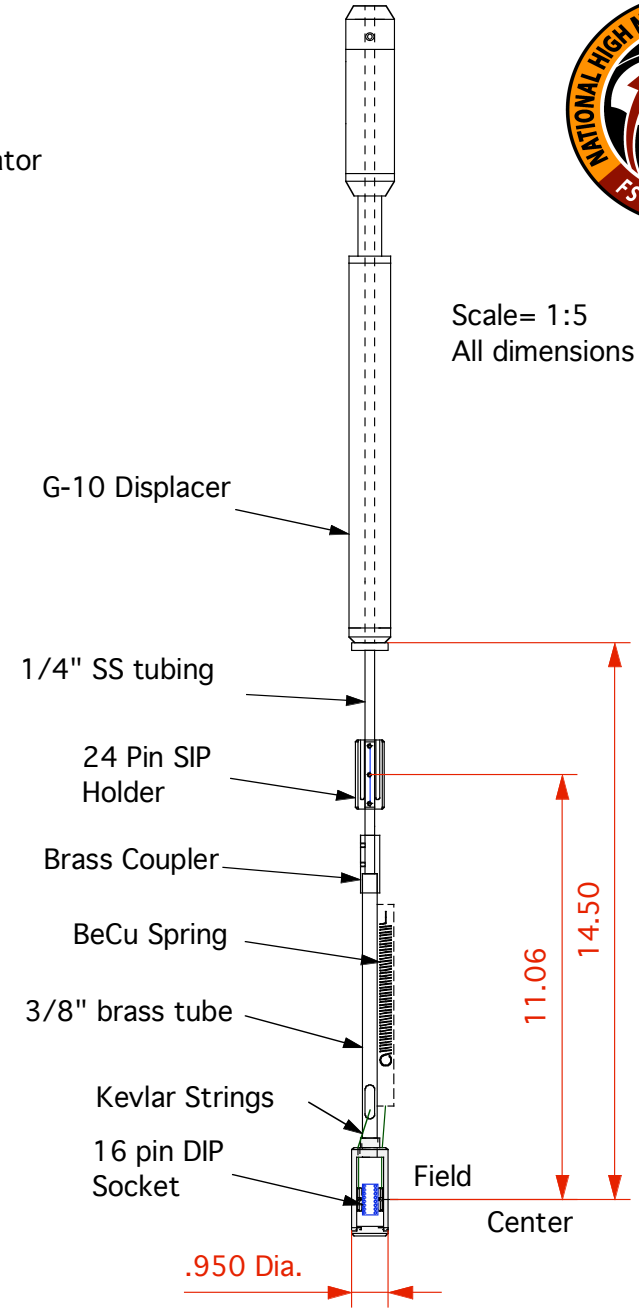

Wiring available: High Freq probe
12 twisted pair
4 S1 coax
2 high conductivity micro-coax

Wiring available: Standard Probe
12 twisted pair
2 S1 coax