Reduction of Temporal Field Fluctuations for Resistive Magnets Using a Field-Frequency Lock

J. Samra, M. Li, J.L. Schiano (Penn State University); K.K. Shetty, W.W. Brey (NHMFL/FSU)

High field resistive magnets offer many advantages for nuclear magnetic resonance (NMR) experiments as they provide fields strengths greater than that achievable with superconducting magnets. However, both the magnet power supply and cooling system produce undesirable temporal fluctuations in the field. Using a feedback control system that senses temporal fluctuations with a pickup coil, in 2007 we demonstrated a 67 dB reduction in the amplitude of the 60 Hz field fluctuation. However, we also noted that further reductions in the amplitude of the fluctuation components at harmonics of the power supply ripple did not produce further improvement in the phase stability of the NMR signals obtained using the Keck resistive magnet. This observation, and an analytical study of the sensitivity of the NMR signal to field fluctuations, suggested that field fluctuations with spectral components well below 60 Hz are producing undesirable modulation of the NMR signal. Unfortunately, because the pickup coil produces a voltage that is proportional to the frequency of the temporal fluctuation component, the measurement signal-to-noise ratio is too small to effectively sense and attenuate low frequency fluctuations.

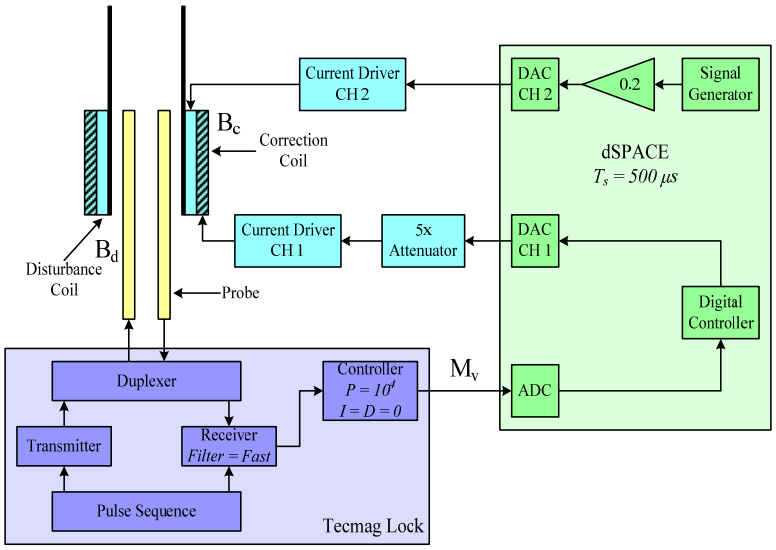

Figure 1. Block diagram of FFL test system employing 7 T persistent superconductive magnet.

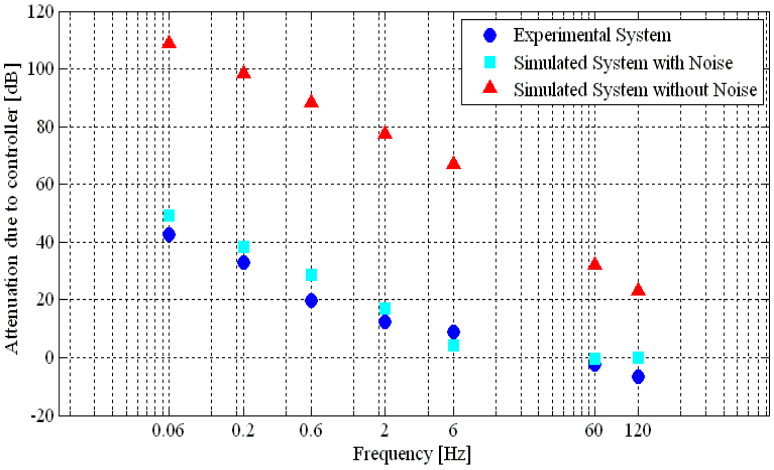

Figure 2. The performance of one FFL algorithm under test is greatly reduced by high frequency field noise.

We are now investigating a complimentary method, known as a field-frequency lock (FFL), which utilizes the NMR signal to sense low frequency fluctuations. This technique, first described in 1948 [1], is now widely used for persistent-mode high resolution superconducting magnets. A recent paper described the use of a FFL to stabilize a powered superconductive magnet [2]. However, the application of conventional FFL approaches to Bitter resistive magnets is not considered to be practical [3]. Not surprisingly, our attempts at using a commercial FFL system for the NHMFL's Keck 25 T resistive magnet have not been successful. During 2008, we carried out experiments to determine how conventional FFL systems perform in the environment of a high-field resistive magnet such as the Keck. We used a 7 T self-persistent superconducting test magnet and the system in Figure 1 to control the noise and drift level. By injecting known temporal fluctuations into the superconducting magnet using a solenoidal disturbance coil, we can systematically evaluate the performance of various FFL control designs. Figure 2 shows the attenuation of the applied temporal fluctuation as a function of frequency for a single control design. This particular algorithm was sensitive to high frequency field noise. The 7 T test system will be used to study improved algorithms and instrumentation for an NMR field frequency lock to be used in the Keck and Series Connected Hybrid magnet now in development.

[1] Packard, M.E., Rev. Sci. Instrum. **19** (7), 435-439 (1948).
[2] Yanagisawa Y. *et al.*, J. Magn. Reson. **192** (2), 329-337 (2008).
[3] Igima T. *et al.*, J. Magn. Reson. **184** (2), 258-262 (2007).