HFEPR STUDIES ON VANADIUM(III) COMPLEXES AS MODELS FOR THE ACTIVE SITE OF VANADIUM NITROGENASE ENZYMES

J. Telser (Roosevelt U.; Chemistry); A. Ozarowski, D. Smirnov, J. Krzystek (NHMFL); W.-C. Chu, Z.-C. Wang, Y.-F. Tsai, K.-Y. Chen, C.-C. Wu, H.-F. Hsu (National Cheng Kung U., Taiwan; Chemistry)

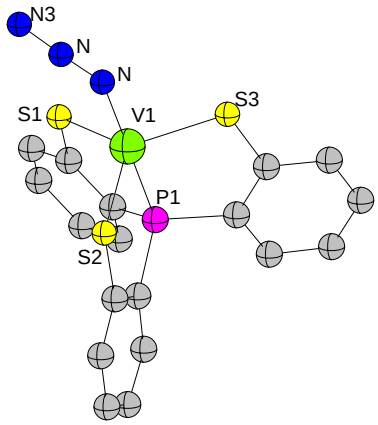

Introduction

One of the most important reactions in biology is the "fixation" (reduction) of dinitrogen (N_2) to ammonia (NH_3). This reaction occurs in various micro-organisms and is catalyzed by the enzyme nitrogenase. Nitrogenase (N_2ase) is an iron-sulfur protein that contains additional metal(s) in the active site: molybdenum (Mo-N_2ase) or vanadium (V-N_2ase), of which the latter enzyme is much less understood.[1] Efforts to understand V-N_2ase have raised interest in low-oxidation state vanadium chemistry in a sulfur-rich ligation environment. This interest has led us to synthesize a series of vanadium(III) complexes, in which the V(III) ion is chelated by a novel phosphine ligand. This trianionic, quadridentate ligand comprises a phosphorus atom directly linked to three arylthiolate groups, which can have various substituents: none, designated as PS3; methyl, designated as PS3'; and trimethylsilyl, designated as PS3". The remaining coordination sites are occupied by a variety of ligand(s) $(L)_n$, such as chloride, azide (N_3^-; molecular structure shown at left), 2,2'-bipyridine, or three hydrazine (N_2H_4) molecules. The overall coordination number thus ranges from 5 to 7. The formally V(III) ion is paramagnetic in all [V(PS3)L] complexes prepared.

Experimental

The Mm and Sub-mm Wave Spectroscopy Facility and the 25-T "Keck" magnet were used in preliminary experiments to evaluate the magnitude of zero-field splitting in polycrystalline samples of [V(PS3)L] complexes. The EMR Facility spectrometer with superconducting magnet was then used to study them in detail.

Results and Discussion

High-frequency and -field EPR (HFEPR) investigation was made of a series of $[V(PS3)(L)_n]$ complexes, where $(L)_n$ = (Cl^-), (1-methylimidazole), (bpy), and $(N_2H_4)_3$. The ground spin state of the investigated complexes is a non-Kramers triplet (S = 1) as expected for V(III), $3d^2$, however the contribution of ligand atoms to this state may be significant. By use of our well-established protocol, the zero-field splitting of the 5-coordinate complexes was determined and found to be relatively small: $1 < D < 2$ cm^{-1}, and with little rhombicity ($E < 0.05$ cm^{-1}). The g values for these were all found to be in the narrow range: 1.94 – 1.98. In contrast, the D value for the 7-coordinate hydrazine complex is very large: estimated from magnetometry to be ~38 cm^{-1}, and thus outside the range of current instrumentation.

Conclusions

The applicability of HFEPR to determine accurately and precisely spin Hamiltonian parameters for a series of novel complexes has been demonstrated. Analysis of these data in combination with structural, optical spectroscopic, and computational techniques is in progress, which will lead eventually to a better understanding of the factors that lead to binding and activation of dinitrogen, presumably via hydrazine intermediates.

Acknowledgements

We thank the NHMFL, Roosevelt University, and the National Science Council of Taiwan for support.

References

[1] Chu, W.-C., *et al*., Inorg. Chem. 45, 3164-3166 (2006).