DIGITAL ULTRASONIC PULSE-ECHO OVERLAP SYSTEM AND ALGORITHM FOR UNAMBIGUOUS DETERMINATION OF PULSE TRANSIT TIME

C. Pantea, D.G. Rickel, A. Migliori (MST-NHMFL, LANL); R.G. Leisure (Colorado State University, Physics); J. Zhang, Y. Zhao (LANSCE-12, LANL); S. El-Khatib (New Mexico State University, Physics); B. Li (State University of New York at Stony Brook, MPI)

The widely applied ultrasonic pulse-echo method uses a short pulse of ultrasound generated by a transducer, often in direct contact with the specimen. The pulse propagates through the material of interest, reflects from the opposite end, and returns to generate a signal in the same transducer: the echo. A measurement of the round-trip travel time and travel distance yields the sound speed from which an elastic constant is determined.

We report an evolution of an all-digital ultrasonic pulse technique for measurements of elastic constants of solids. We use an unambiguous analytical procedure for determining the correct time delay of echoes without any need for actual echo overlap, using a cross-correlation procedure between the buffer rod (BR) and sample (S) signal. We also provide a simple procedure for making corrections for transducer-bond-induced phase shifts [1]. The precision of a measurement made with this system at ambient temperature exceeds one part in 10^7 without the use of mixers, gates, time delays, and other complications normally associated with such measurements.

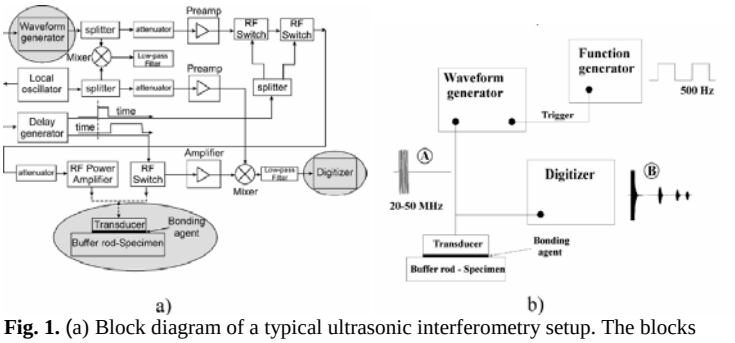

Fig. 1. (a) Block diagram of a typical ultrasonic interferometry setup. The blocks marked in gray are the ones we are keeping in the present measurement setup. (b) Block diagram of the present experimental setup.
side:

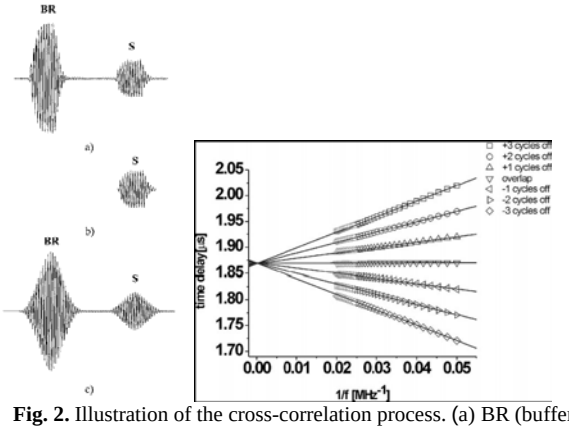

Fig. 2. Illustration of the cross-correlation process. (a) BR (buffer rod) and *S* (specimen) signals as collected on the digitizer, (b) the *S* echo signal, and (c) result of cross-correlation procedure. Right Measured time delay between the BR and *S* signals vs. the inverse of frequency of the excitation signal.

The present approach has the advantage that it eliminates the need for complicated electronics (see Fig. 1) used in ultrasonic interferometry, where two gated sinusoidal pulses need to be generated, spaced in time at different values as a function of the specimen size. The need for only one excitation pulse is a great advantage and can be obtained with a single gating procedure.

Also, we demonstrate that substantial oversampling of the measured signal is not necessary if individual cycles in the BR and *S* signals are fitted to a polynomial function. The use of cross correlation and different overlap peaks determines the correct overlap condition unambiguously. We also show that excitation frequencies higher than the natural transducer resonance should not be used because of additional errors introduced by the presence of an additional frequency component at the natural transducer resonance.

Acknowledgements

This work was performed under the auspices of the National Science Foundation, the State of Florida, and the U.S. Department of Energy.

References

[1] Pantea, C., *et al*., Rev. Sci. Instrum., **76**, 114902 (2005).