NOTES:
1. REMOVE ALL BURRS AND SHARP EDGES UNLESS SPECIFIED.
2. MAXIMUM ROUGHNESS UNLESS SPECIFIED
3. END OF NOTES

Material: Be-Cu
Quantity: 1
Contact: Ju-Hyun Park (NHMFL-mK)
(352-359-1962)

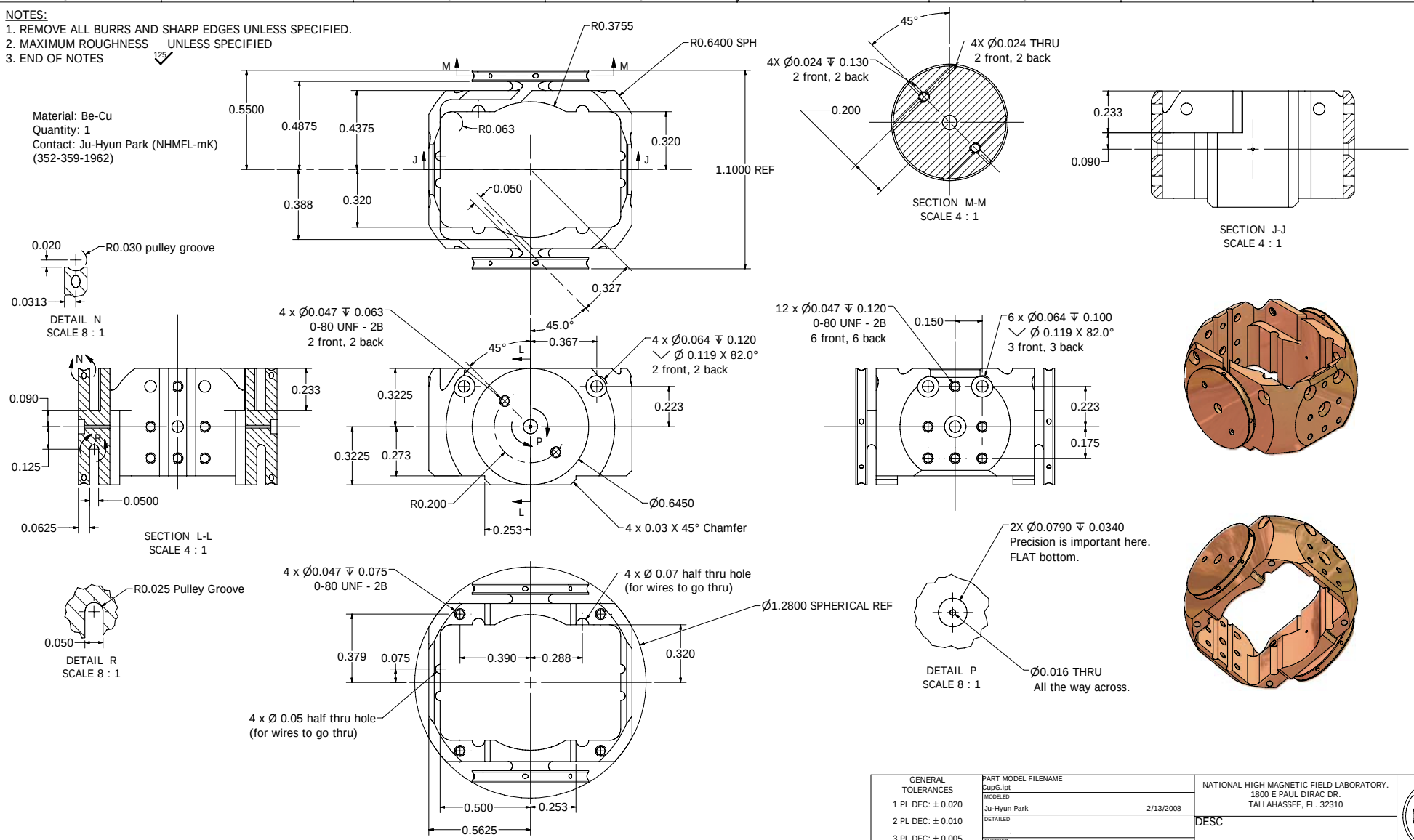

GENERAL TOLERANCES 1 PL DEC: ± 0.020 2 PL DEC: ± 0.010 3 PL DEC: ± 0.005 ANGLES: ± 1°	PART MODEL FILENAME CupG.ipt MODELED Ju-Hyun Park 2/13/2008 DETAILED CHECKED	NATIONAL HIGH MAGNETIC FIELD LABORATORY. 1800 E PAUL DIRAC DR. TALLAHASSEE, FL. 32310 DESC	
UNLESS OTHERWISE SPECIFIED, DIMENSIONS ARE IN INCHES. DO NOT SCALE DRAWING	PROJECT XCF_Rotator	SIZE D DWG NUMBER CupG	REV -A-
THIRD ANGLE PROJECTION		SHT 1 OF 2	

This drawing and the information it contains are both property of the Florida State University and are to be held by the recipient as confidential and are not to be transfered to any third party, used to make or furnish information for making any physical structure or any pictorial, graphic or verbal reperesentation of any information contained herein or copied (unless supplied in productive form) without the express written consent of the Florida State University.

Angle indication marks

Please mark (scratch using small mill)
the top surface of body at every 15°.

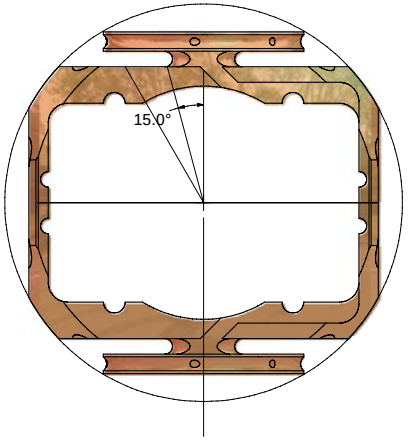

Round indicated edges.

Edges along top and bottom of this surface

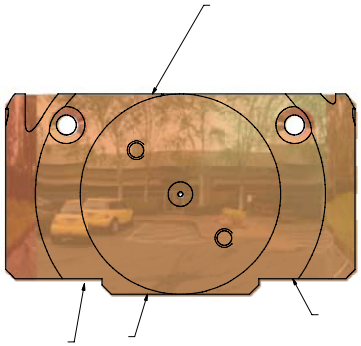

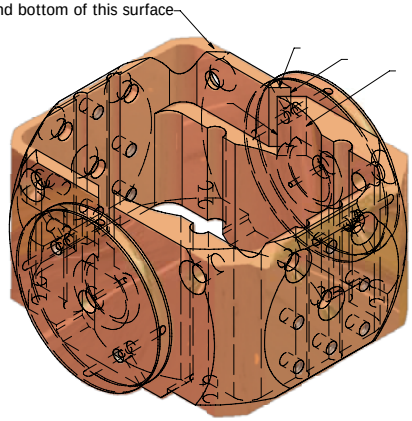

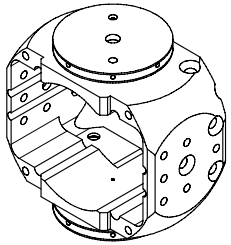

This drawing and the information it contains are both property of the Florida State University and are to be held by the recipient as confidential and are not to be transfered to any third party, used to make or furnish information for making any physical structure or any pictorial, graphic or verbal reperesentation of any information contained herein or copied (unless supplied in productive form) without the express written consent of the Florida State University.

THIRD ANGLE PROJECTION

GENERAL TOLERANCES
1 PL DEC: ± 0.020
2 PL DEC: ± 0.010
3 PL DEC: ± 0.005
ANGLES: ± 1'

UNLESS OTHERWISE SPECIFIED, DIMENSIONS ARE IN INCHES. DO NOT SCALE DRAWING

PART MODEL FILENAME: CupG.ipt
MODELED: Ju-Hyun Park 2/13/2008
DETAILED: .
CHECKED:

PROJECT: XCF_Rotator

NATIONAL HIGH MAGNETIC FIELD LABORATORY.
1800 E PAUL DIRAC DR.
TALLAHASSEE, FL. 32310

DESC

SIZE: D
DWG NUMBER: CupG
REV

SHT 2 OF 2