Pressure Induced Changes of the Magnetization of Mn_7 Molecules

M. Bencomo*, D.M. Pajerowski,
E.L. Danielson and M.W. Meisel

Department of Physics and the NHMFL
University of Florida
Gainesville Florida 32611-8440

*Permanent Address: Physics Department, University of Texas at El Paso, El Paso, TX 79968

Project

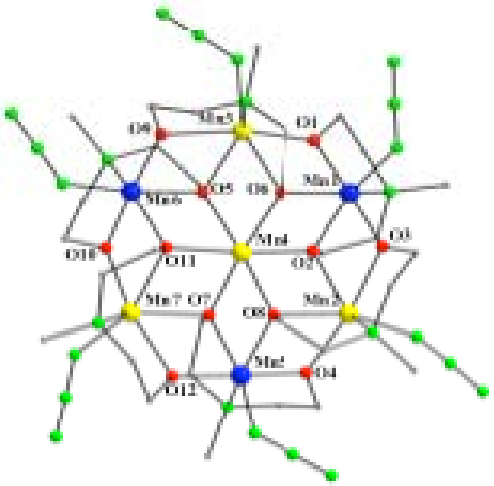

- Motivation
- Samples
  - Mn_7
- Equipment
  - Thermometry
  - TDO
  - Pressure Cell
- Experiment Configuration
  - Probe Configuration
- Future Research

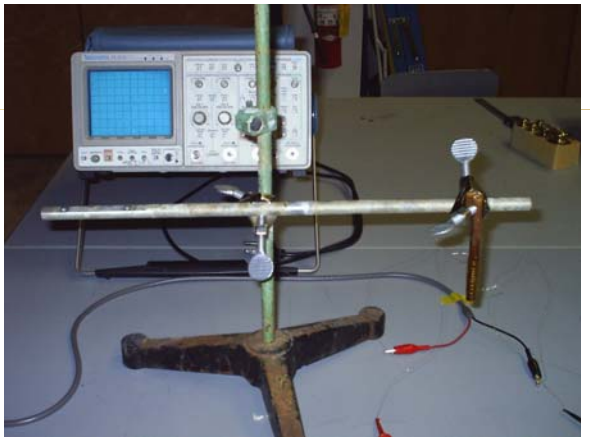

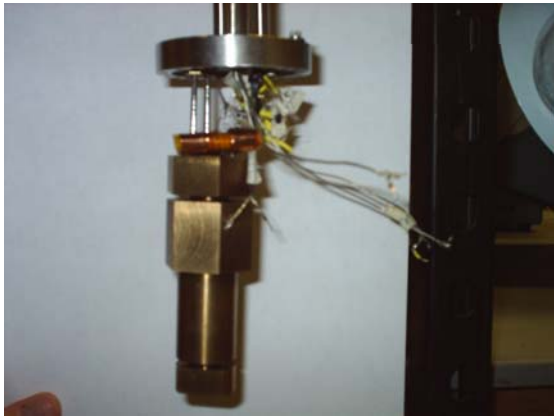

Mn_7 samples, ground state spin S=11 and S=16

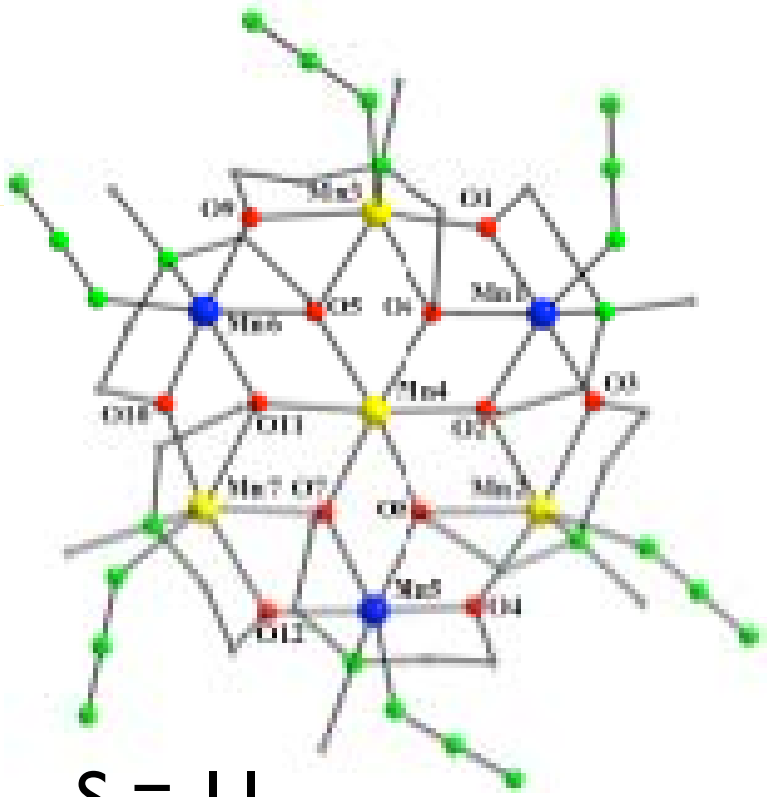

S = 11

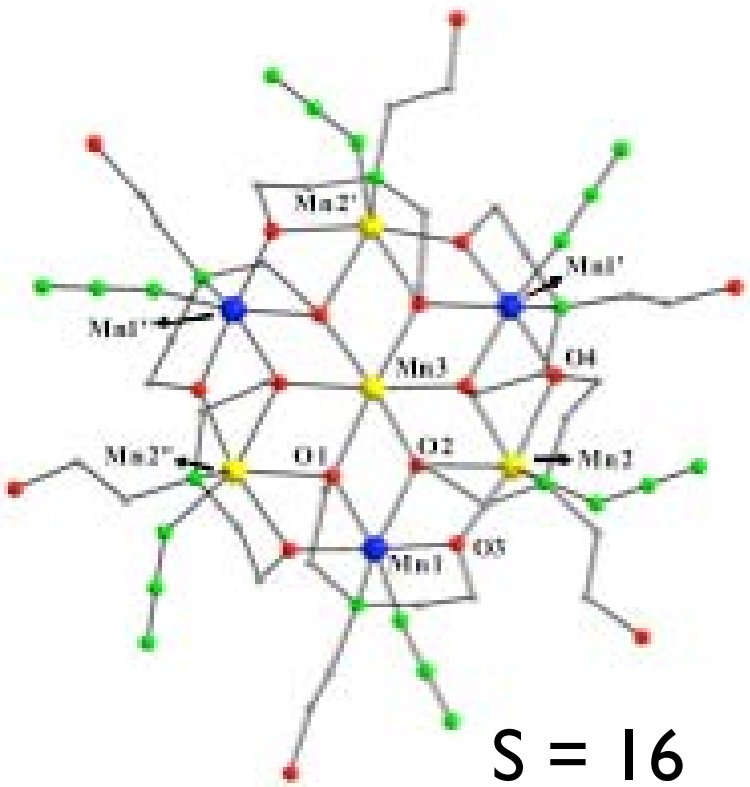

S = 16

T.C. Stamatatos et al. (2008), preprint.

Mn_7 samples, ground state spin S=11 and S=16

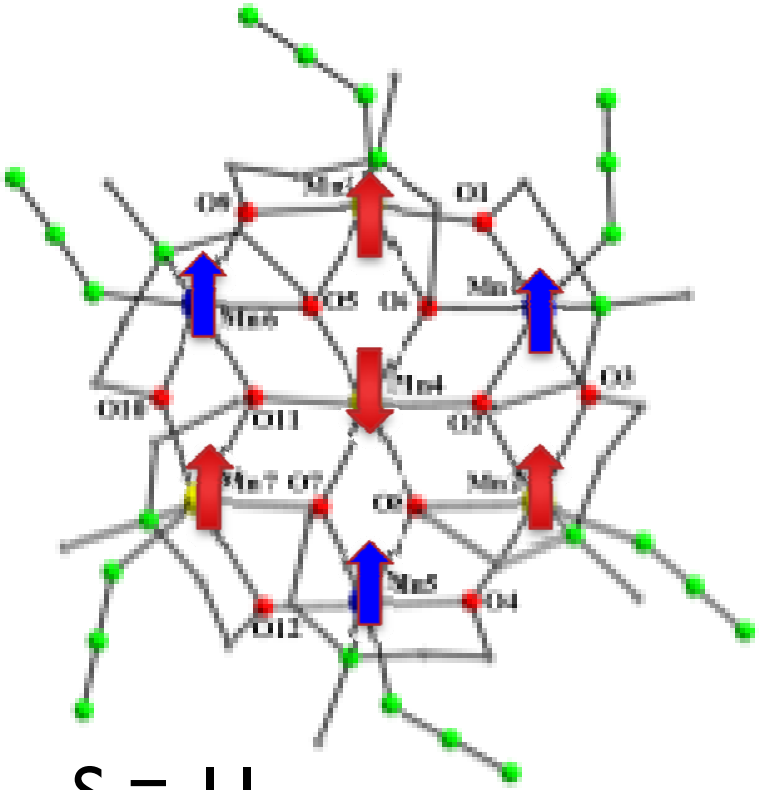

S = 11

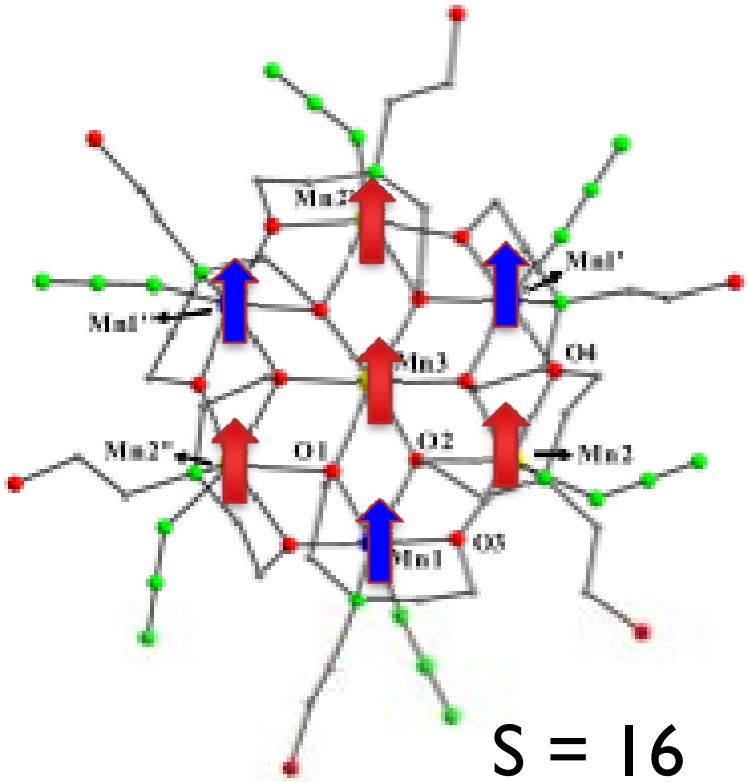

S = 16

T.C. Stamatatos et al. (2008), preprint.

S=2 S=5/2

Mn_7 samples, ground state spin S=11 and S=16

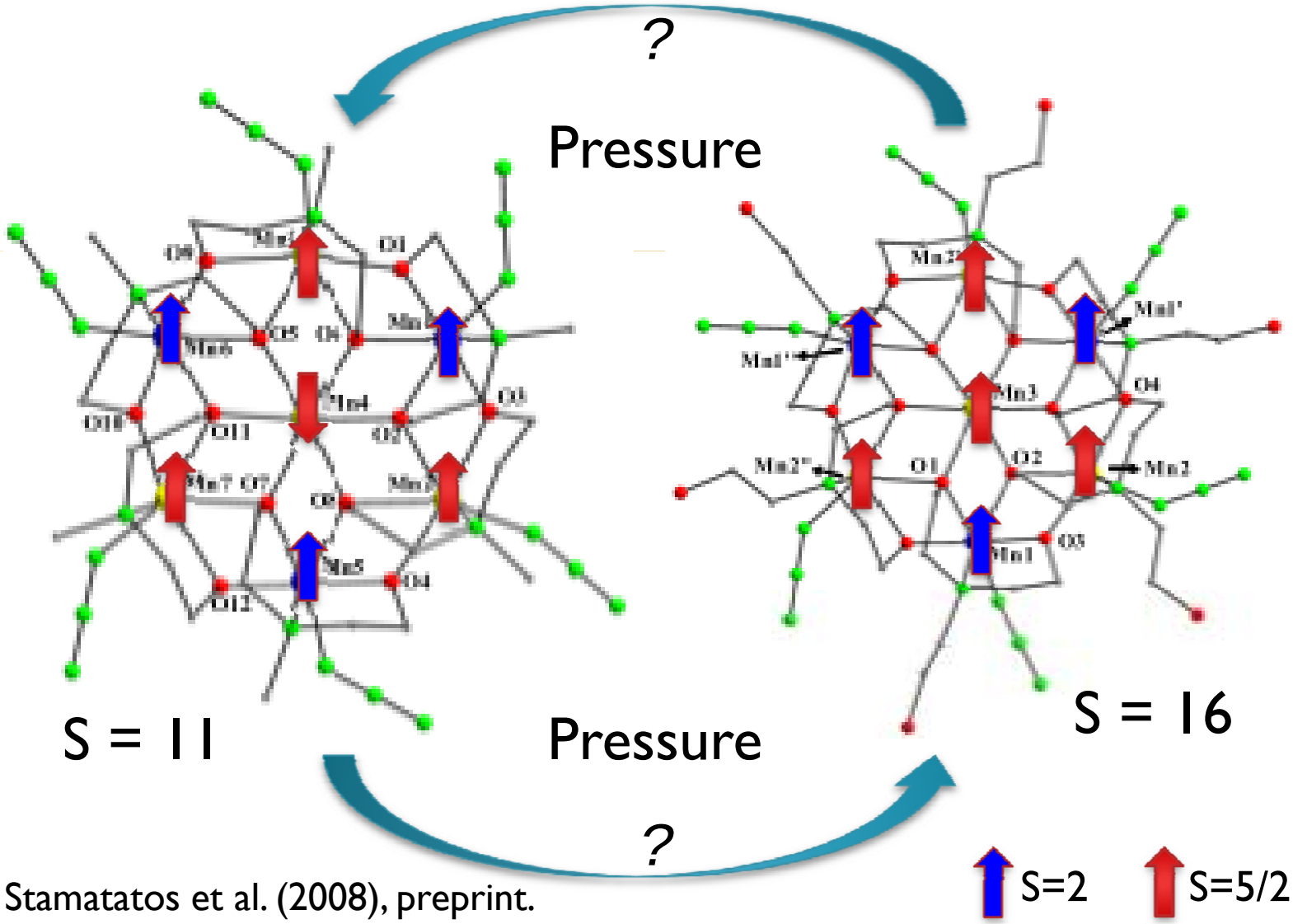

T.C. Stamatatos et al. (2008), preprint.

Platinum Resistance Thermometer (PTR)

Why Platinum?

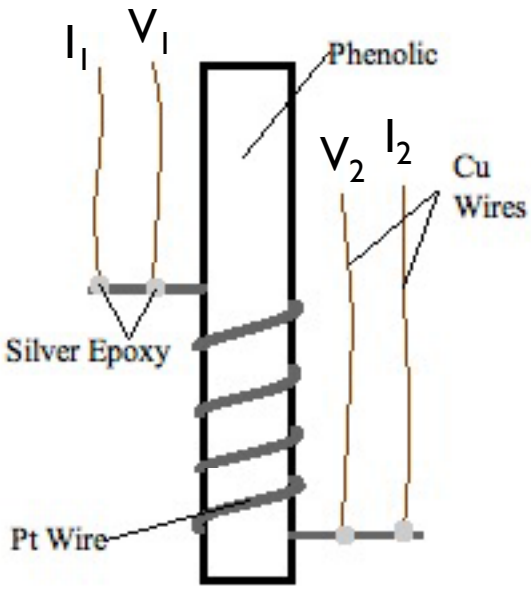

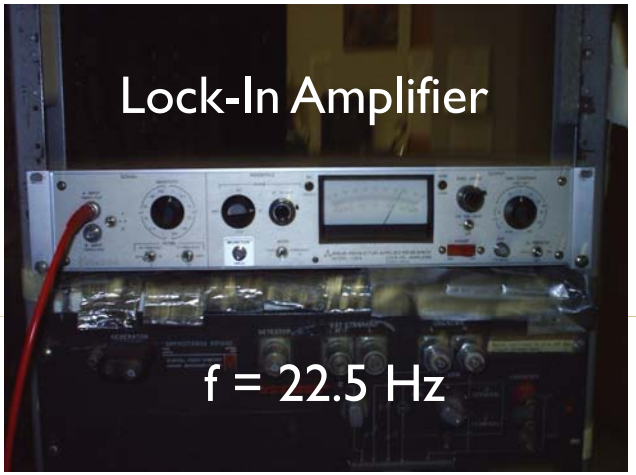

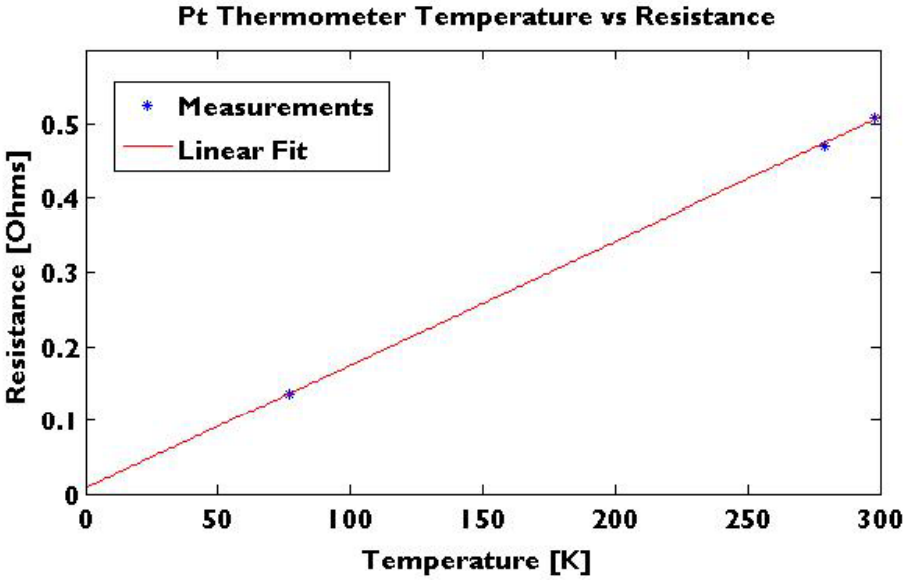

Tunnel Diode Oscillator (TDO) and Resonant Methods

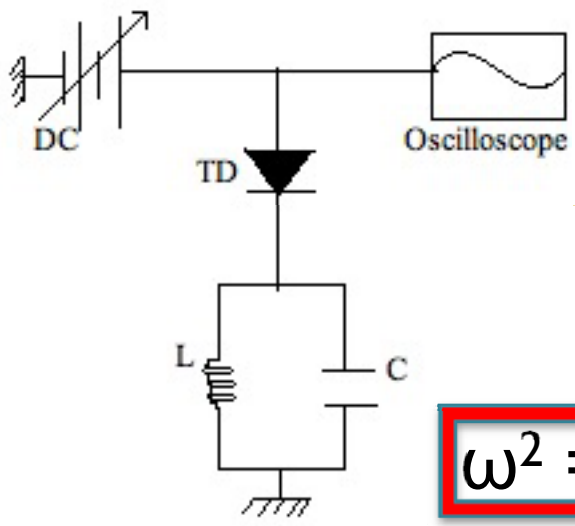

Basic TDO circuit

$$\omega^2 = 1/LC$$

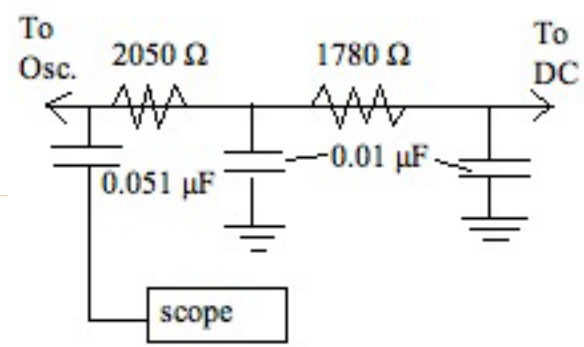

RF Choke

Resonant methods provide precision and high sensitivity for detecting physical properties

Oscilloscope Screen Captures

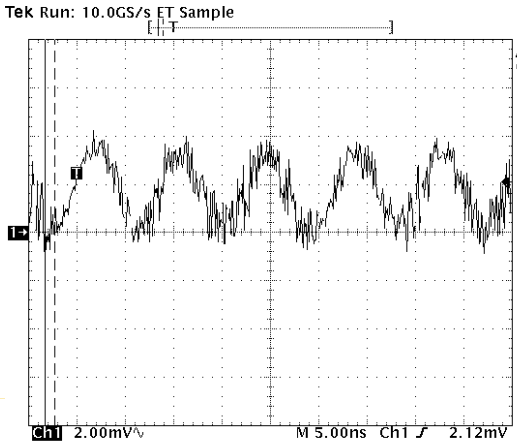

Basic TDO circuit

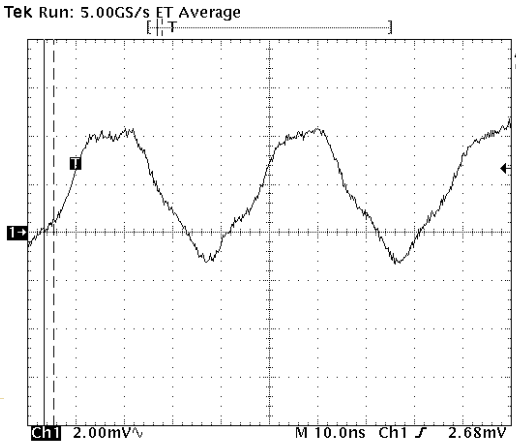

5 pF across TD

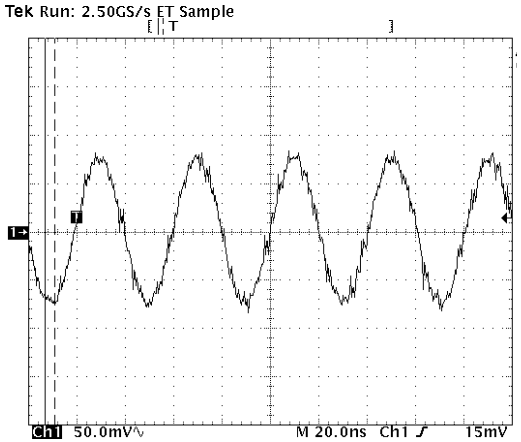

5 pF + RF choke + RF amp.

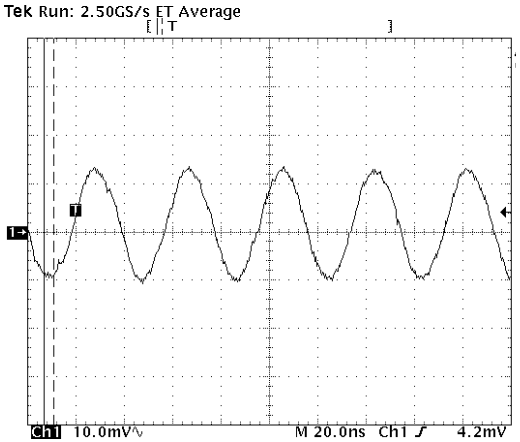

5 pF + RF choke

Pressure Cell and Sample Packing

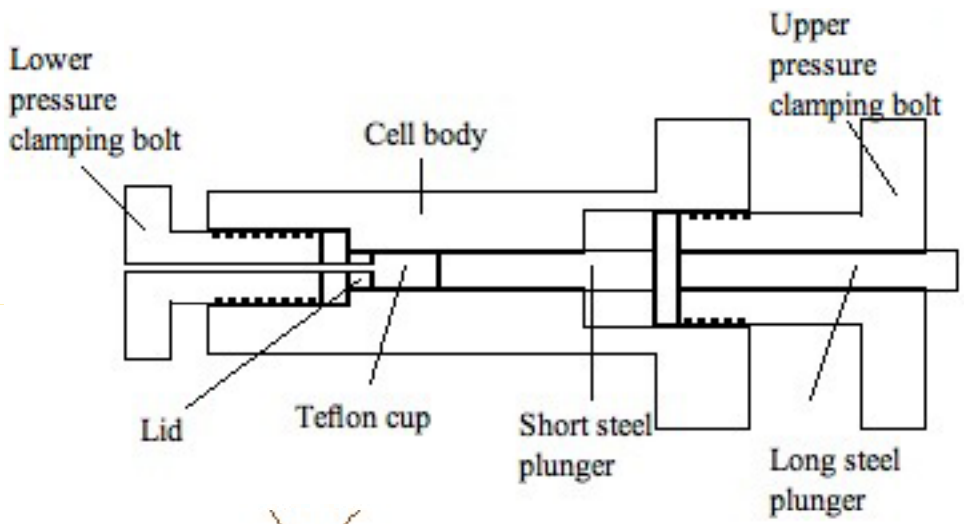

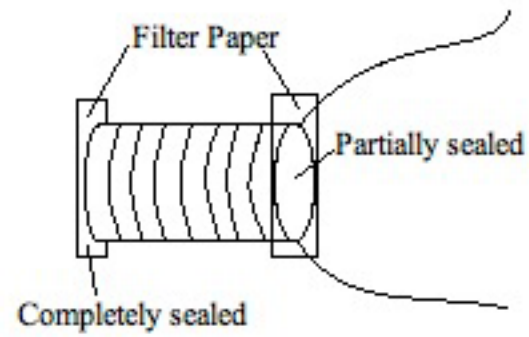

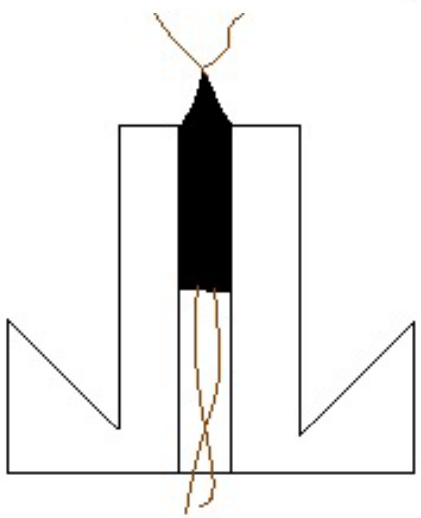

Lid configuration

1:1 n-pentane-isoamyl alcohol solution inside Teflon cup

J.D. Thompson, Rev. Sci. Instrum. 55, 232 (1984)

Probe Configuration

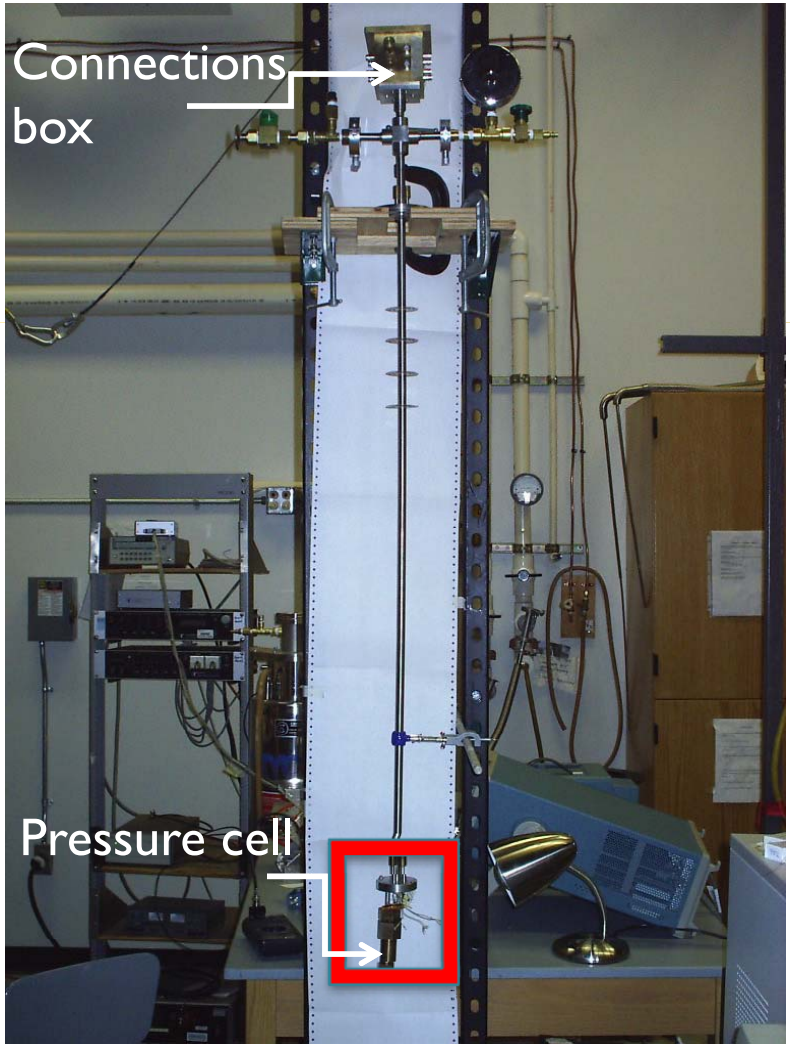

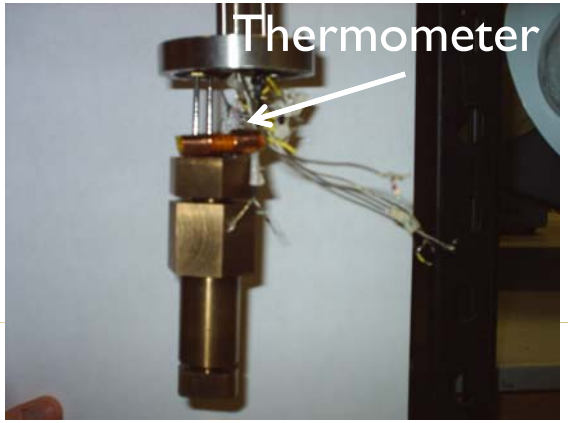

Probe Configuration

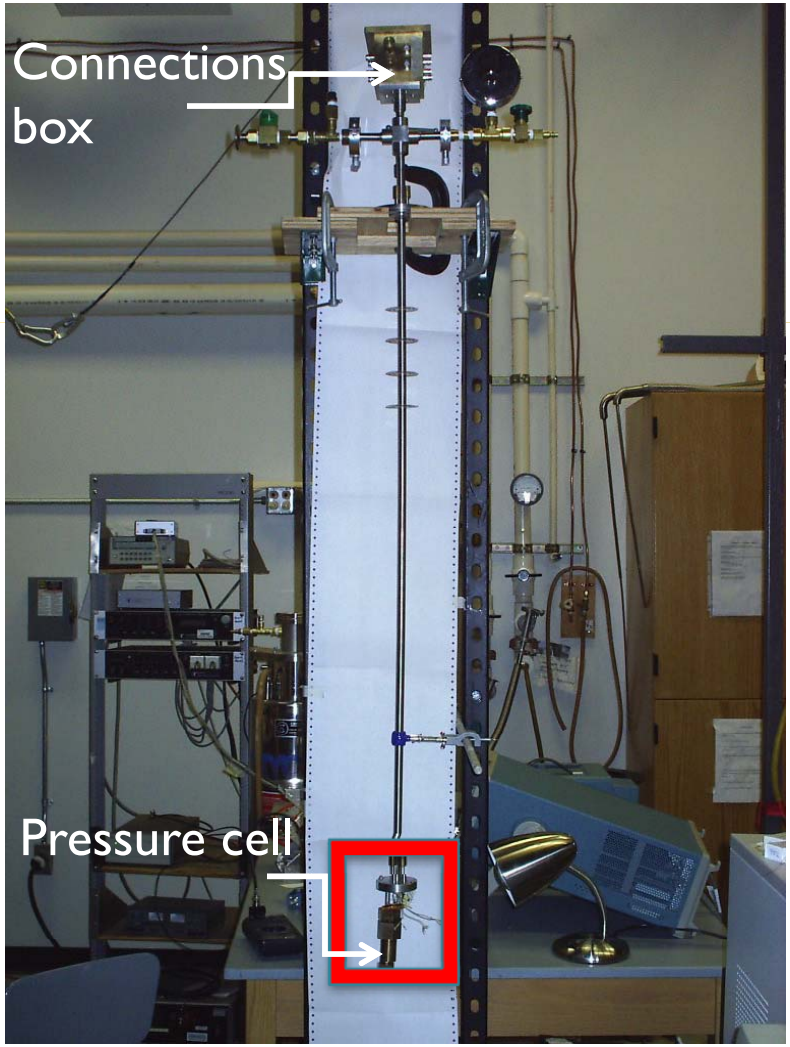

Summary

- To discover S = 11 $\xleftrightarrow{\quad}$ S = 16

  P

- Resonant methods
- Resistance thermometry
- Hydrostatic pressure techniques

Future Directions

- Measure Pb $T_c(P) \approx 7$ K
- Measure Mn_7 S = 11 and S = 16
- Measure Pb and both Mn_7 samples at the same time

Future Directions

- Measure Pb $T_c(P) \approx 7$ K
- Measure Mn_7 S = 11 and S = 16
- Measure Pb and both Mn_7 samples at the same time
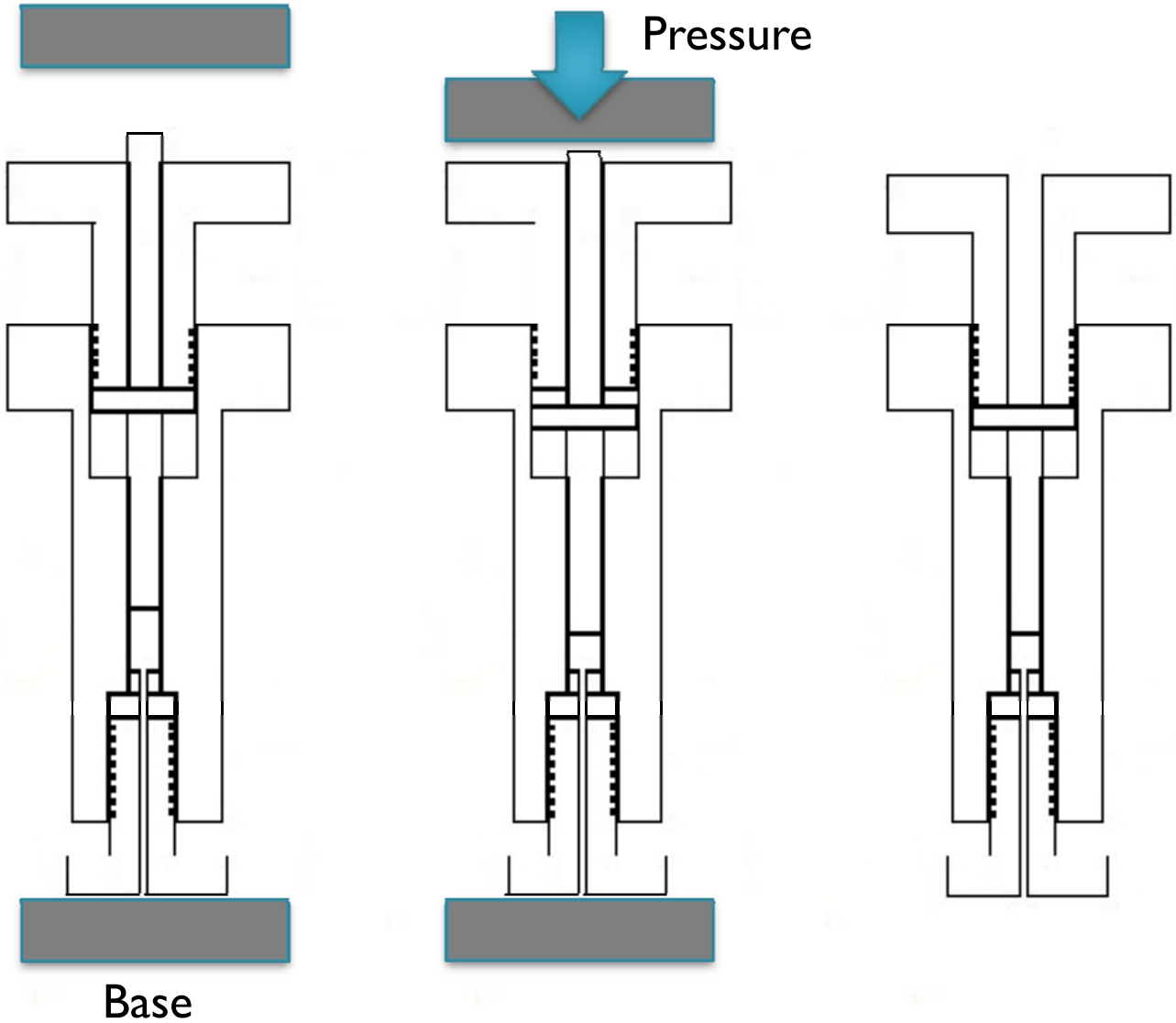
Pressure cell and press