Nb-based device for sensitive on-chip magnetometry

REU Student: *Charles Stein*,
Department of Physics, Texas Southern University, 3100 Cleburne Street, Houston, Texas, 77004

Mentor: *Lei Chen*, Graduate Research Assistant,
PI: *Dr. Irinel Chiorescu*,
Department of Physics, Florida State University & National High Magnetic Field Laboratory, 1800 East Paul Dirac Drive, Tallahassee, Florida, 32310

Introduction:

The study was carried out at the National High Magnetic Field Laboratory (NHMFL) and Florida State University (FSU) as part of the Research Experience for Undergraduates (REU) 2005 program. This project is an important component of the research program *Quantum Spin Dynamics* which is underway in the newly established laboratory of Dr. Chiorescu at NHMFL.

The long-term goal of our study is the practical realization of a very sensitive detector to be used for sensing small magnetic moments. To this purpose, we plan to use niobium (Nb) based Superconducting Quantum Interference Devices (SQUID) elaborated on small silicon chips. We present here the preliminary results of our study. During the two month period of the REU program we were able to set-up the measurement installation, build low-pass filters for stable "four-point" measurements and elaborate the first superconducting Nb structures.

This report is structured as follows: *(i)* a background on our study; *(ii)* an explanation of the fabrication and *(iii)* measurement techniques that we used; *(iv)* the realization of the low-pass filter; *(v)* the experimental results followed by *(vi)* the future plans and the concluding remarks.

Background:

The functioning principle of a SQUID is well-known and is one of the numerous applications of superconductivity. Many textbooks are presenting in depth the basics of the Josephson junctions and SQUIDs (see for instance [1]) and we will briefly outline here their functioning.

At very low temperatures the electrons in a superconductor are joining in groups of two forming what are called the "Cooper pairs" (CP). The new physical properties of such a

pair allow them to act as one, as part of a single wavefunction. The amount of these pairs flowing in the superconductor gives the value of the superconducting current. A characteristic of such a device is the maximum superconducting current (or critical current, I_c) that can flow. If the injected current was higher than I_c, the material undergoes a transition into the normal, resistive state.

A Josephson junction (JJ) can be seen as a lumped circuit element introducing an important phase shift in the wavefunction of all CP (as mentioned above). Examples of a junction are: a constriction of the superconducting material, a tunnel barrier or a point-contact between two superconductors. A Josephson junction strongly reduces the critical current, allowing to record transitions between the superconducting and the normal states at much lower currents. This reduces considerably undesired heating effects.

A SQUID is made of two Josephson junctions placed on two branches connected in parallel (see Fig. 1 left). The injected current splits between the two branches and thus the critical current of the SQUID should be simply twice the critical current of a single junction. However, the wave characterizing the CP splits as well into the two branches and the result of the recombination at the other end of the SQUID depends on the magnetic flux penetrating the enclosed area between the two branches. Detailed calculations show that the I_c of the SQUID is $I_{cSQUID} = 2\, I_{cJJ}\, |\cos(\pi\Phi/\Phi_0)|$ where I_{cJJ} is the critical current of a single junction, Φ is the flux through the SQUID area and $\Phi_0 = h/2e$ is called the quantum flux. This last formula basically describes the entire functioning of a SQUID: the magnetic moment of a sample determines Φ which determines I_{cSQUID}. To measure I_{cSQUID} one ramps the current through the device until it switches into the normal state of finite resistance. Variations in the magnetization of a sample will be detected as variations of I_{cSQUID}.

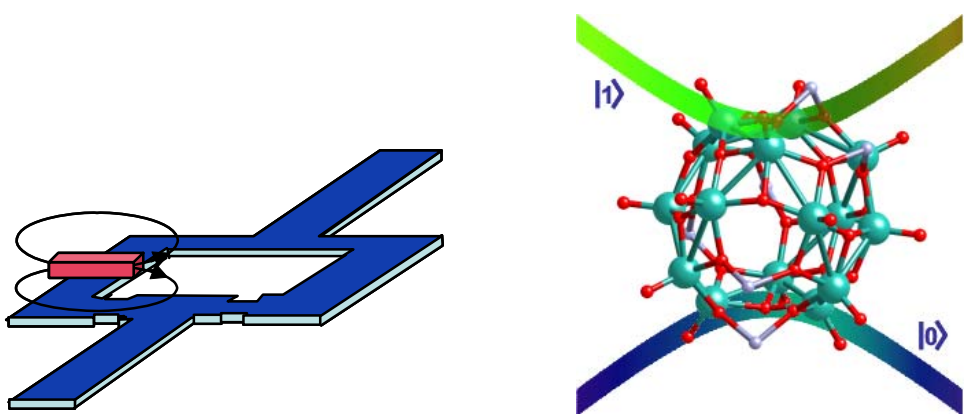

Fig.1 **(left)** The magnetic moment of a molecular single crystal will be measured by a SQUID; the device will be made by nanolithography means at MARTECH. **(right)** An example of a molecular two-level system, the V_{15} molecule: each V ion (in blue) carries a S=1/2 spin and the antiferromagnetic couplings between the spins lead to a total spin of 1/2. The level diagram illustrates the energy of the states |0> and |1> of a molecular qubit as a function of magnetic field.

Commercial equipment using SQUIDs to detect magnetic moments are widely used in research laboratories. In this equipment, the sample and the SQUID are physically

separated by a large distance to allow an easy change of the sample while using the same SQUID. Consequently they show a medium (or even low) sensitivity and require large samples. A much stronger coupling between a sample and a SQUID can be obtained by placing the sample onto a SQUID elaborated on a chip. Only recently was this envisaged as a way to highly increase the sensitivity [2]. Our goal is to further develop these structures. We plan to develop Nb-SQUIDs integrated on the same chip with microwave lines (waveguide). The close proximity of the sample, microwave guide and SQUID should boost the sensitivity of the experiment. The device will not only measure magnetic moments but will also allow the excitation and the coherent control of a magnetic moment.

The main application that we foresee is the study of magnetic molecules (see Fig. 1 right). The molecular magnets are formed of decoupled large magnetic molecules arranged within a crystal. Thus, the quantum properties of a single molecule are amplified at the macroscopic scale of a single crystal. Each molecule is characterized by a spin S, and thus 2S+1 quantum states. Our goal is to achieve coherent transitions between these states using microwave pulses of controlled frequency and length, which will have direct implications in the quantum computation area.

Fabrication Techniques:

To the purpose of our research we use the fabrication facilities existing at the MARTECH Institute (Dept of Physics, FSU) that comprise clean-room equipments, e-beam and optical lithography, thermal evaporators and a Magnetron high-vacuum sputtering machine (see Fig. 2 left). During the time of the REU project we used the sputtering machine to obtain thin films of Nb, of various thicknesses [3]. A Si wafer is cleaned in acetone, methanol, and isopropanol and loaded into a sample holder. Once loaded, a mask, which is a window cut in our desired geometry of 3mm by 1mm is put over the wafer. The sample is then loaded into the Magnetron and sputtering begins. Sputtering is a vacuum process capable of depositing very thin films on substrates (in our case a Si wafer). It is executed by applying a high voltage across a low-pressure gas to form plasma, made of electrons and gas ions in a high-energy state. During sputtering, excited plasma ions strike a target, composed of the desired coating material, Nb, and cause atoms from that target to be ejected with enough energy to travel to, and bond with, the substrate. For satisfactory sputtering to occur, we found it imperative for the mask to contact the Si wafer to provide samples with well defined edges. After several attempts to achieve superconducting Nb, we found the desired preparation time of the Nb target was to be at least 10 min. After sputtering, we check the sample's resistance at a probe station (see Fig 2 right) by applying a current from a current source and measuring its voltage with a voltmeter.

Fig.2 **(left)** The Magnetron sputtering facility used for thin film deposition at MARTECH. **(right)** A sample in which the mask did not adhere to the Si wafer is shown at a probe station. The needles shown provide electrical contacts used to determine the sample's resistance.

Experimental set-up:

Once the samples of Nb thin film are fabricated, we perform current-voltage measurements (IV curves) in order to observe the superconducting state of the Nb and the corresponding switching current. All the measurements were done at NHMFL.

By using a current source and a voltmeter we are able to conduct four point measurements on the Nb film (see Fig 3 left) while in the He vessel (see Fig 4). The resistivity of a conducting sample is often determined using this method. With a four-point technique, two outer probes are used for sourcing current and the two inner probes are used for measuring the resulting voltage drop across the surface of the sample. Using four probes eliminates measurement errors due to the contact resistance between each metal probe and the superconducting material.

The sample is placed on a filter board (see Fig 3 right), as discussed below, and into the copper cavity. Next we introduce it into the first IVC (inner vacuum chamber). We bring the pressure inside each volume down to 5E-5 torr and insert a small volume of He exchange gas which provides the thermal contact with the He bath. The insertion is sealed and lowered into the He vessel (see Fig 4) gradually while monitoring the decrease of the temperature. Inside the copper cavity hosting the samples, there is a resistive heater that can be used to reach temperatures higher than 4.2 K. We used it to measure the critical temperature of the Nb film which is approximately 6 K. The measurements and temperature control are automated by using LabView.

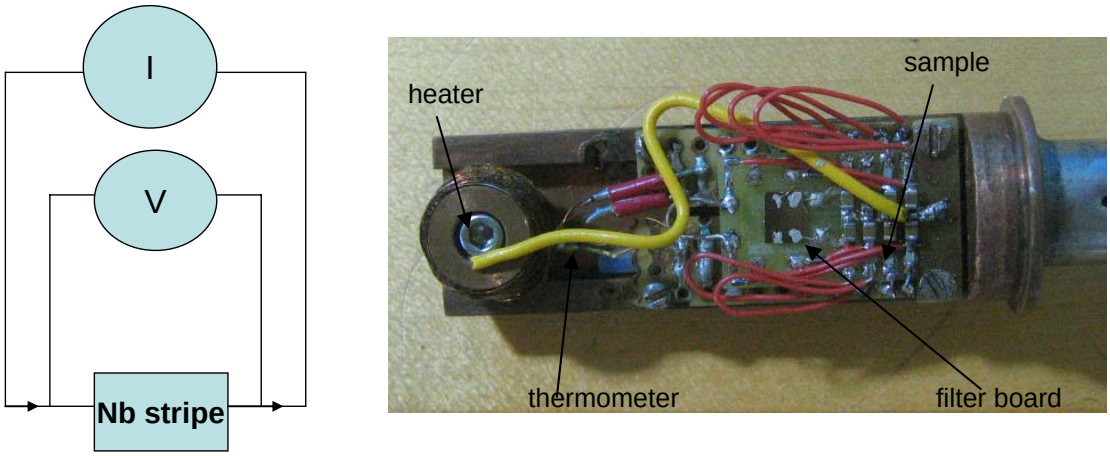

Fig.3 **(left)** A scheme of a four point probe showing two current carrying wires outside of two wires measuring the voltage drop across the sample [3]. **(right)** An open view of the copper showing the sample mounted on the filter board along with the heater and thermometer.

Fig.4 The He vessel in which the dipstick was lowered in order to reach 4.2 K, a sufficient temperatures for observing superconducting Nb.

An important part of the present REU project consisted of the development of an electronic board to improve the quality of our measurements. With our equipment being at room temperature while observing our samples' characteristics at a low temperature, electronic noise influences the accuracy of our readings. Room temperature equipment is very noisy while cooler equipment is relatively silent. To minimize this noise, low pass filters are needed. The filter board to be placed inside of the copper cavity consisted of eight RC filters placed below a 5.5 mm x 5.5 mm square sample holder (see Fig 5). The design allows the possibility of recording two simultaneous four point measurements. The low pass filter passes low frequencies fairly well, but attenuates, or blocks, relatively

high frequencies emmitted by the room temperature equipment. We will now describe in more detail the functioning of an RC filter.

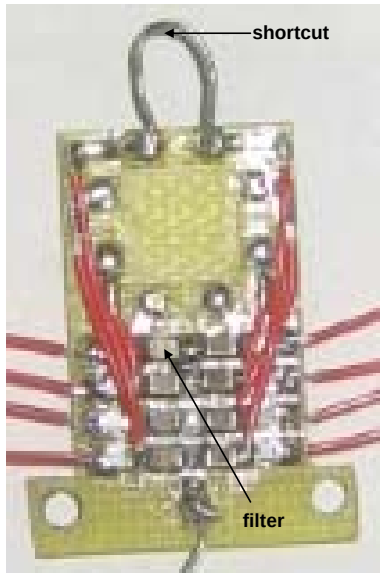

Fig.5 The electronic filter board shown without sample in place with four wires on each side used for taking four point measurements from up to two samples.

Theory of an RC filter:

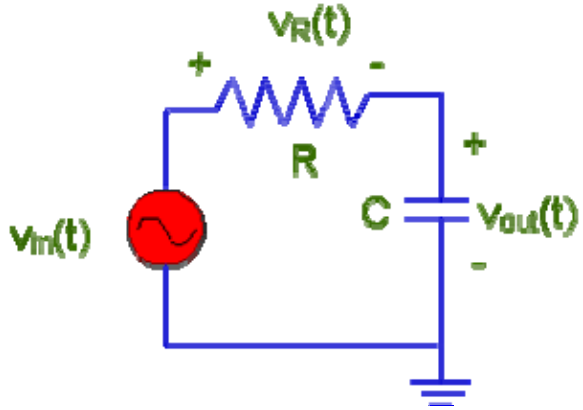

Fig.6 Illustration of a resistor-capacitor (RC) circuit, used as a low-pass filter [4].

A simple resistor-capacitor (RC) circuit (see Fig 6) has frequency dependent behavior, and responds to a sinusoidal signal input [4]. If the output voltage is given by

$$\mathbf{v_{out}(t) = B \sin(\omega t)}$$

Then, since the output voltage is across a capacitor, we can compute the current flowing through R and C as:

$$\mathbf{i(t) = C dv_{out}/dt = CB\omega \cos(\omega t)}$$

And then we can compute the voltage across the resistor, R, as:

$$v_R(t) = Ri(t) = RCB\,\omega\cos(\omega t)$$

The input voltage is given by,

$$v_{in}(t) = v_R(t) + v_{out}(t)$$

Which we are able to rewrite as:

$$v_{in}(t) = B\sin(\omega t + \Phi)\sqrt{1 + (\omega \cdot R \cdot C)^2} = A\sin(\omega t + \Phi)$$

The ratio of the amplitude of the output to the input voltage is given by:

$$B/A = 1/\sqrt{1 + (\omega \cdot R \cdot C)^2}$$

If one notes that the cutoff frequency is $f_c = 1/(2\pi R \cdot C)$, we can see that

$$B/A = 1/(\sqrt{1 + (f/f_c)^2})$$

When the ratio of B/A is equal to $1/\sqrt{2}$, the frequency supplied is partially passed and partially stopped, operating at half power. When the frequency measured is half of the frequency supplied, this is known as the cutoff frequency.

Results:

To characterize a filter, we apply a frequency to it and measured the amplitude of the sinus at the input voltage and again at the output. We used a signal source with variable frequency and read the output with an oscilloscope. It was found that the filter can withstand much higher applied frequencies at low temperatures because the capacitor value varies with temperature.

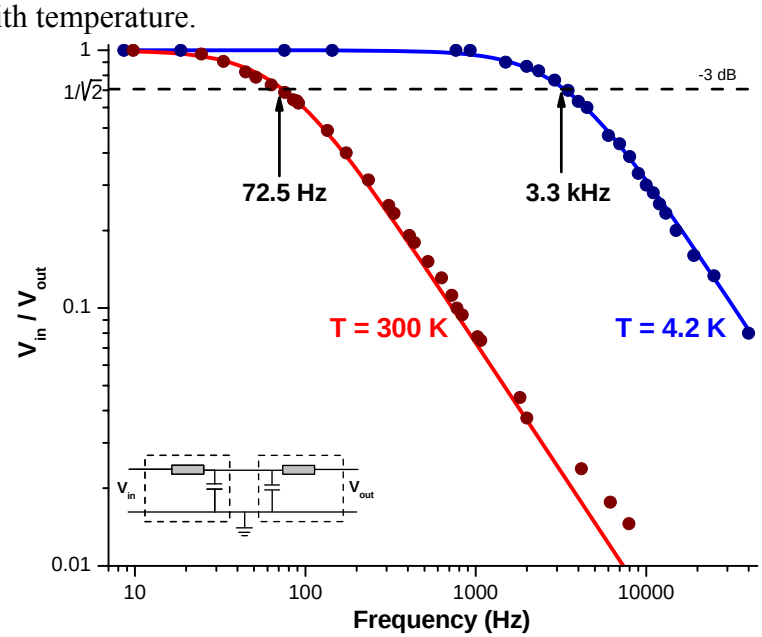

Figure 7. Measured characteristic of the filter at room temperature and 4.2K. R=1kΩ, C=2μF, $f_c = 1/(2\pi RC)$, Fit $1/\sqrt{1+(f/f_c)^2}$

The cutoff frequency we measured was half of the theoretical frequency because we used two filters in series versus a single one. Two filters were used (see Fig 7) because it was more convenient to combine them in series using our on-chip shortcut. At room temperature, 300 K, we measured the filter's cutoff frequency to be 72.5Hz. Once in the He vessel at 4.2 K, the cutoff frequency was found to be 3.3 kHz.

We now present IV curves for the last Nb film (see Fig 8). It has a thickness of 45 nm and critical currents of about 2.5 mA. We took IV measurements at 4.2 K, 5.5 K, 5.7 K, and 6.3 K. We increase the current applied to our sample until the film switches from superconducting into a normal state. This current at which this occurs is the switching current. Then we ramp down the current and the film returns to the superconducting state, this current is noted as the re-trapping current.

We expected to obtain significantly lower critical currents when decreasing the size of the structure from mm to tens or hundreds of nm. Studies of films with thicknesses of 5, 10, 20 and 30 nm are currently under way.

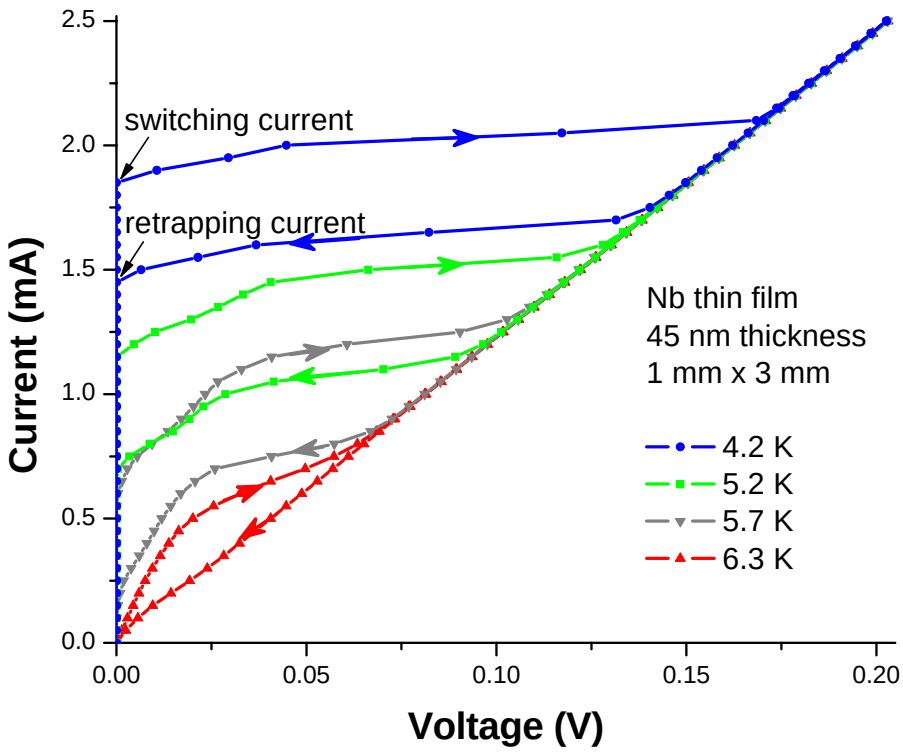

Figure 8. IV curve at various temperatures

Concluding Remarks:

Obtaining superconducting Nb by means of sputtering is a preliminary yet important step in the realization of the SQUID. Having constructed an electronic filter to more accurately characterize our samples, we are now ready to commence more detailed fabrications. We are prepared to elaborate smaller structures by e-beam lithography. After which we will fabricate Josephson junctions and lastly, SQUIDs.

References:

1. Tinkham, Michael. Introduction to Superconductivity 2d ed. New York, NY, McGraw-Hill, Inc, c1996

2. W. Wernsdorfer et al, J. of Applied Physics, 78, 7192 (1995).

3. Wasa, Kiyotaka. Handbook of sputter deposition technology: principles, technology, and applications / by Kiyotaka Wasa and Shigeru Hayakawa. Park Ridge, N.J., U.S.A. : Noyes Publications, c1992.

4. http://www.facstaff.bucknell.edu/mastascu/eLessonsHTML/Freq/Freq1.html

Acknowledgements:

We would like to express our gratitude for the continued support of the REU program to the National Science Foundation, to Dr. Gregory Boebinger (Director of NHMFL), Dr. Pat Dixon (Director of the Center for Integrated Research and Learning), Dr. Stephan von Molnár (Director of Martech, FSU) and to Ms. Gina Lafrazza (Assistant Director of the Center of Integrated Research and Learning FSU REU Programme).