Building RF probes and writing computer interfaces for CMPNMR

2005 REU Program at the
National High Magnetic Field Laboratory, Tallahassee, FL

Tomi Herceg
Princeton University

Abstract

NMR is one of the tools used at the forefront of scientific research and at the Magnet Lab to investigate the properties of new materials to be employed in new technologies. Aside from innovative research, Dr. Reyes' goal for several years has been to improve the NMR performed in his lab by condensing all the instrumentation as a single program onto a computer screen. It began with MagRes, a new piece of hard- and software that replaced the spectrometer which has expanded to include the signal generator, oscilloscope, network analyzer etc.

Through this study of programming and I/O communications logic, I expanded the code, which integrates a network analyzer's capabilities into MagRes, to suit communication with two other analyzers.

As a secondary project, I also constructed a 0 Tesla field probe to use in testing the analyzers and for future 0 field experiments in the lab.

Introduction

Nuclear magnetic resonance is a process by which the spin property of nuclei is used to learn how nuclei interact with their environment. The nuclei are placed in a permanent magnetic field and their absorption and emission of electromagnetic radiation of a specific frequency is observed.

[1]All nuclei can be characterized by a property called spin, which induces a magnetic moment vector. Some spins are at a base energy state while other are excited to higher energy states. The Boltzmann distribution ($N^-/N^+ = e^{-E/kT}$) tell us that there will be more spins at the base energy state than at the higher energy states. It is the difference between N+ and N- that is of interest in NMR. This group of spins has a net magnetization vector of M_0 that when placed in a strong magnetic field will align in the direction the field dictates.

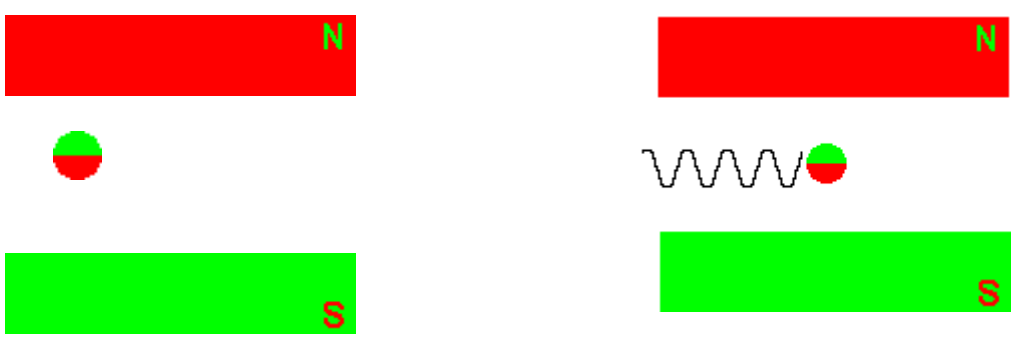

When the nuclei are exposed to a second magnetic field perpendicular to the permanent field and the axis on which they are aligned, their spins will undergo precession. As a result, their paths will deflect towards the plane of the second field and they will revolve around the axis on which they were aligned when placed in the strong permanent field. The frequency at which they nuclei will revolve is called the Larmor frequency, and intrinsic property of all nuclei, and is equal to the frequency of the photons which are absorbed.[1]

[3]The type of signal used to energize the protons is radio frequency – RF – because it falls in the Larmor frequency range of all atoms: 1Mhz to 4Ghz. This signal is run through a solenoid, which encases the sample, as alternating current. To cause the greatest spin

deflection, the frequency of the AC current must match the Larmor frequency of the sample. As the spins relax back to their ground states they will create a current in the solenoid opposite in the direction to the initial current. It is this current along with relaxation time constants that are measured and used to determine the physical properties of the sample.[3]

The purpose of this project was to build a 0 T field probe which can be tuned using stepper motors and a computer program as well as writing computer interfaces for two network analyzers. The probe will be used to test samples which exhibit their own magnetic moments while the network analyzers are used to tune the RF circuits in probes to absorb current of a specific frequency.

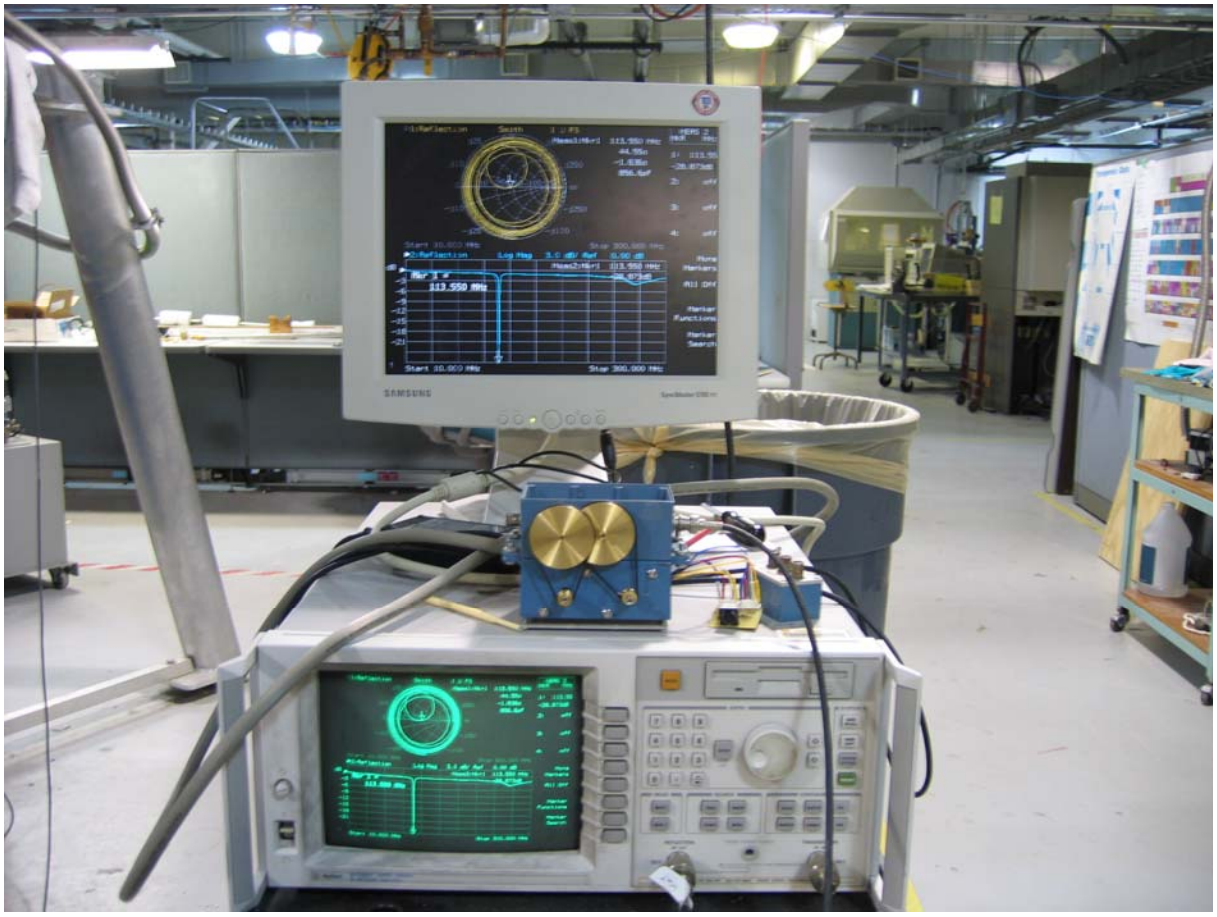

Materials

The materials necessary to build the probe ensemble were two variable capacitors, an inductor, wires, two stepper motors, custom pulley wheels, O-rings. These materials were assembled using a drill, a lathe, a caliper and screws. The materials necessary to write the interfaces for the network analyzers were a computer, network analyzers, LabView programming software and GPIB cables.

Methods and Results

[2]The RF circuit is the heart of the probe ensemble. It consists of an inductor and two variable capacitors. The inductor emits the secondary magnetic field which causes the spins to undergo precession. Because the inductor's impedance is a function of the frequency of the

inputed signal, when the frequency of the signal changes and the impedance of the inductor no longer matches that of the input wire, the signal will be returned. Thus, by itself, the inductor will only absorb current of a specific frequency. Since current of different frequencies is required for different samples, the coil is placed in parallel with once capacitor and in series with another. By adjusting the capacitance, one can “trick” the signal by controlling the impedance of the whole circuit and thus the frequency of the absorbed signal.[2]

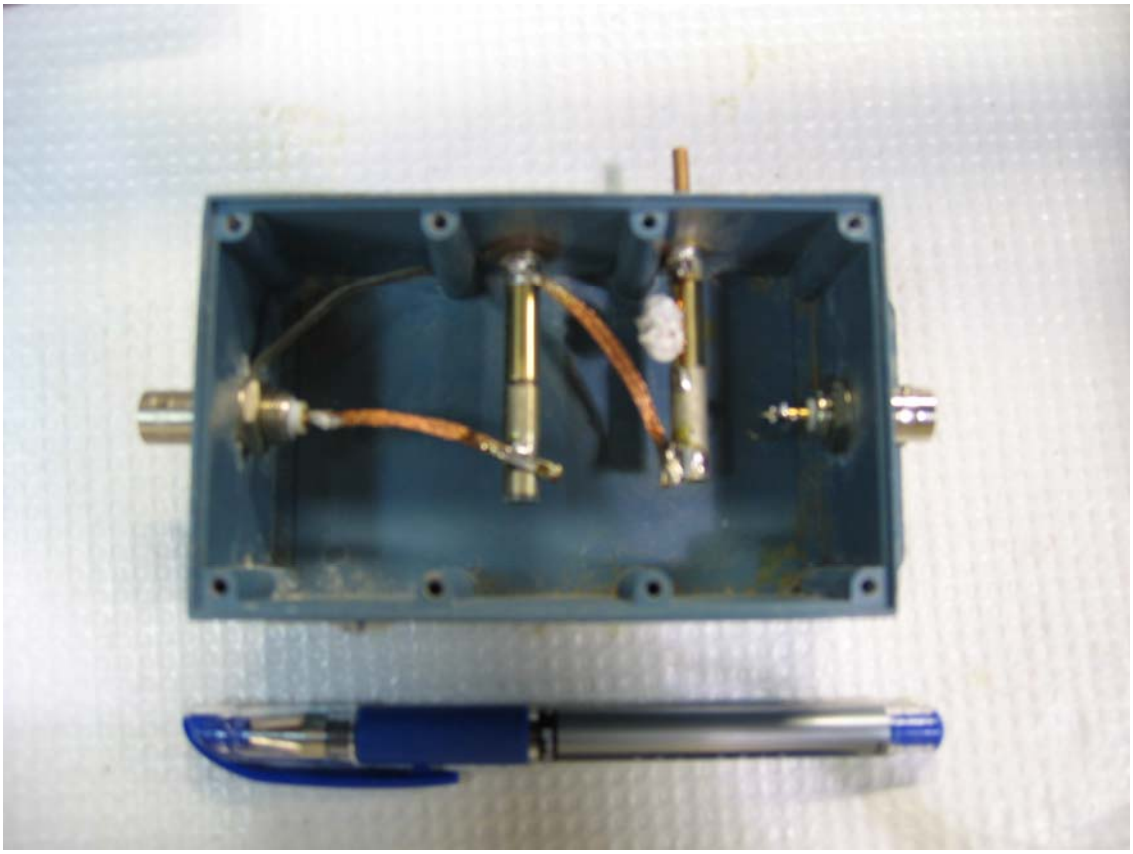

To remotely controlled the variable capacitors, their tuning rods have been connected to stepper motors. The motors’ drive shafts move in increments of a step or half step and turn the tuning rods through a pulley system. For this system, 4 pulley wheels were manufactured: two whose size was maximized to produce maximum torque on the capacitor tuning rods and two whose size was minimized to allow maximum output speed for the motors. The RF circuit and the motors were each housed in metal boxes – 10.7cm x 6.7cm x 4.3cm – which had holes drilled for the motor shafts, the capacitor tuning rods and screws. Precise measurements with a caliper were essential to this step as there is no error margin in metal work, as opposed to woodwork. The boxes were then joined and the pulley wheels linked with O-rings cut and glued to size to form the final product. Ultimately, the probe assembly was successful as the probe is fully functional: the diameter ratio of the two types of pulley wheels is sufficient to provide enough torque to the variable capacitors, the drive mechanism is smooth and does not slip and the motors are fully controllable from the computer via a parallel cable.

The network analyzer is the instrument employed to tune the RF circuit to a specific frequency. It sends out signals at a number of frequencies - between a specified minimum and maximum frequency - indicated by the number of points it is set to. The impedance of the

circuit dictates what signal will be will be absorbed or repelled based on the signal's frequency. The NA reads the response of the circuit and plots what is absorbed or repelled. The signals which are repelled have a power of zero decibels on the power versus frequency graph while the one which is absorbed will have a positive or negative decibel value.

7.6 AutoTuning SetUp Using Network Analyzer

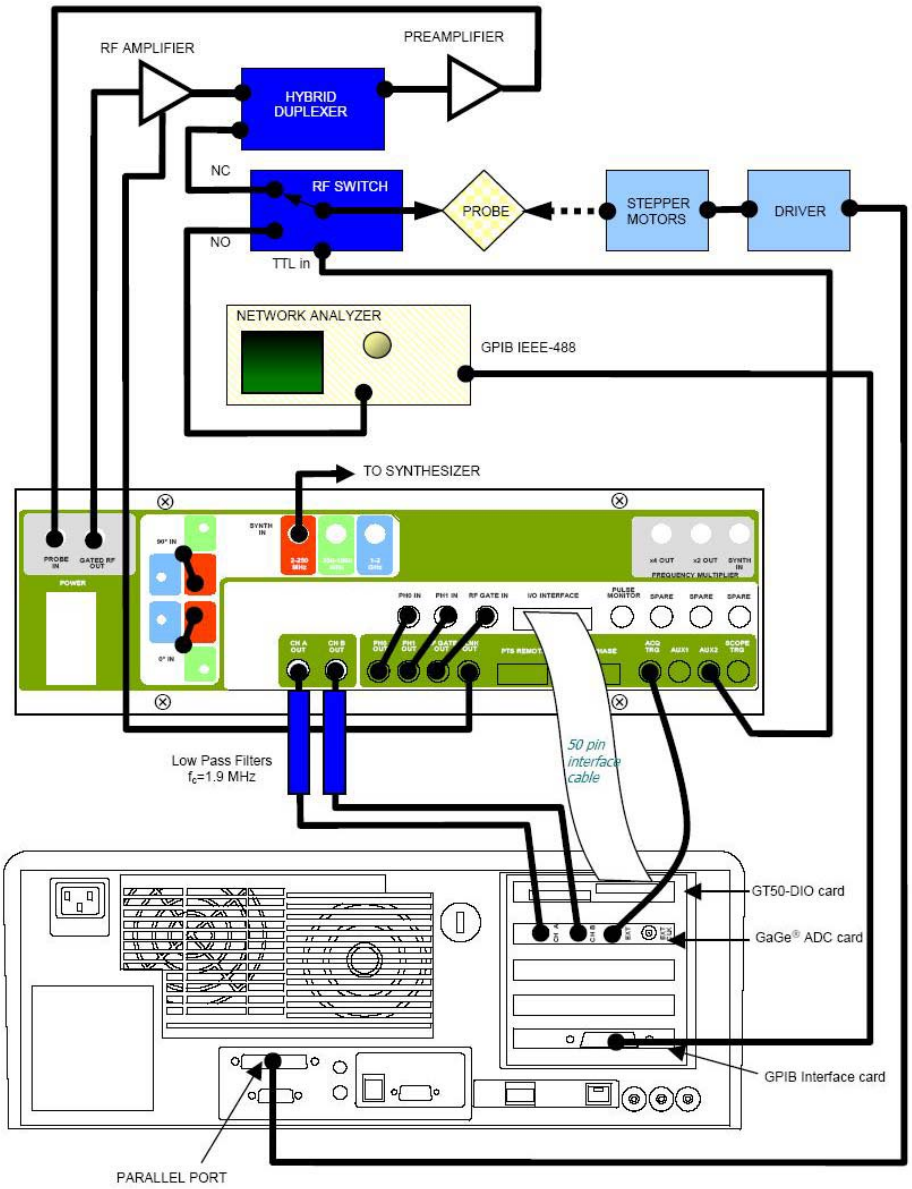

The computer communicates with the network analyzers through a GPIB interface. GPIB allows for faster data transfers than serial or parallel, simultaneous communication with up to thirty-one devices – as opposed to one or two with serial or parallel - and a controlled mode in addition to talked listener. The first step was to establish GPIB communication was possible by sending a series of simple queries to the device, such as an identification command: "IDN?". These tests succeeded immediately and the process continued with researching commands which fulfilled the desired functions, namely:

- turning the RF output on or off

- querying whether the RF output is on or off
- asking for the number of points used in the sweep
- setting the number of points used in the sweep
- querying the minimum and maximum frequency used
- setting the minimum and maximum frequency used
- set the marker frequency
- setting the title of the plot
- querying for the data points

For the older network analyzer – the HP8753C – it was a matter of searching through the alphabetically arranged list of commands in the programming guide. I began with by triggering and single sweep with the "SING" command, setting the data output format to IEEE 64-bit with the "FORM3" command and finally ensuring the previous operation have completed with the "OPC?" command before collecting formatted data from the apparatus using the "OUTPFORM" command. Because the data is a string which carries a 4 byte header that contains the byte length of the data points, I separated it from the rest of the data using a subset string function, converted it to a number and used it to type cast the data points from a string to a number array. Finally, I allowed the analyzer to continue its measurements with the "CONT" command.

I imported this data collection virtual instrument (VI) into another VI which takes the data, interpolates it using a VI Dr. Reyes wrote, and calculates the x and y coordinate at the minimum point. To query or set the sweep limits I used the "STAR" and "STOP" commands along with the necessary parameters, units (Mhz), number string to number conversions, number multipliers and string concatenations. To set the marker position I used the "MARK" command along with units (Mhz), string to number conversions and string concatenations. To set or query the number of points in the sweep I used the "POIN" command and, finally, to set the plot title I used the "TITL" command. Unfortunately, the 8753C does not have a function which permits switching the RF signal on or off.

[4]For the newer network analyzer – the Agilent E5061A – the commands obey the Standard Commands for Programmable Instumentation (SCPI). These are organized in the instrument programming manual in families of commands based on their function. The commands which I employed in the interface are part of the INITiate, SENSe, FORMat, CALCulate, DISPlay, CONTrol and OUTPut families.[4] As a program has already been written for another network analyzer which supports SCPI, I employed his program and SCPI commands after changing the command syntax in some instances. While the RF on/off query and set, the limit query and the number of points query and set command syntax was left intact, the limit set, the marker set and the text set command syntax were modified as the parameter format required for the E5061A is different from the analyzer used by Dr. Reyes.

The data collection VI for the E5061A is one which has already been written, but with modifications to some commands and the data processing. The command used to collect the data is ":CALC1:DATA:FDAT?" which is part of the calculate family. It queries the device to output formatted data, which is than processed to eliminate the header, which contains the values for the points in the sweep, and finally converted from a string to an array using a type cast.

Ultimately, the LabView interfaces for both the 8753C and the E5061A network analyzers were successful in collecting the data from the analyzers via GPIB and plotting it on a graphs identical to those which appear on the analyzer screens. The scientists who will be running tests with the MagRes system in the future can now tune their probes from their computer screens regardless of which analyzer they will be using.

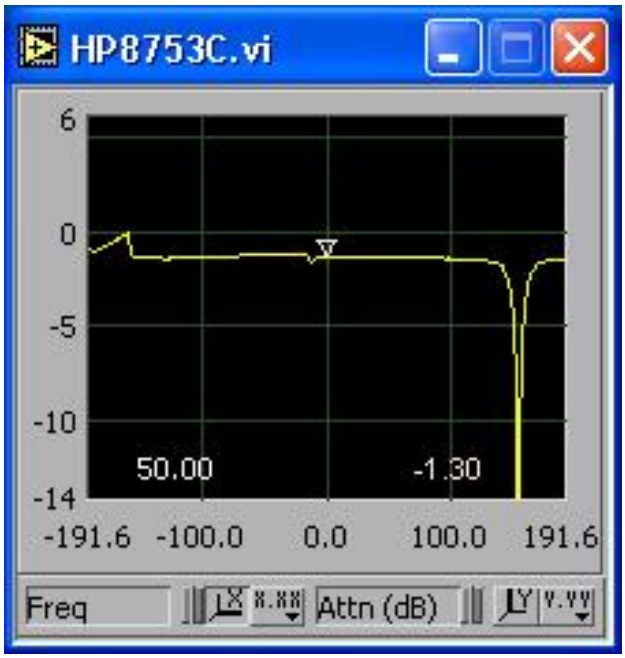

Challenges

The first challenge I encountered in building the probe was that in the past there was insufficient torque applied to the capacitor tuning rods. To solve this problem I maximized the diameter of the pulley wheels which attached to the tuning rods without having the wheels touch each other, the pulley wheels attached to the motor drive shafts, or the boxes. Another challenge I encountered with the probe assembly was that one of the pulley wheels attached to a capacitor brushed against the set screw of the pulley wheel attached to the other capacitor. The solution was to shorten the set screw using a Dremel tool.

The first challenge that appeared when programming the network analyzer interfaces was that I did not know the data output formats. After consulting the programming manuals for both analyzers, I learned that the data was organized as dictated by the format command with headers of specific length for each instrument. Once I separated the plot data and the headers, I could type cast the data and obtain an array of numbers.

Future plans

To improve the network analyzer computer interfaces, the communications interface can be switched to VISA, which allows for a broader range of communications hardware and simplifies the programming of the interface. The probe function can also be improved by switching the matching and tuning capacitors, which would allow for faster tuning of the circuit.

References

[1] Hornak, Joseph P., *The Basics of NMR*, 1997. http://www.cis.rit.edu/htbooks/nmr/.

[2] Kuhns, P. (series of personal interviews, 2005)

[3] Harter, A. (series of personal interviews, 2005)

[4] Agilent Technologies. *Agilent E5061A/E5062A ENA Series Programmer's Guide*, 2004. http://cp.literature.agilent.com/litweb/pdf/E5061-90002.pdf

Acknowledgements

I would like to thank everyone in C120 for their help and guidance: my mentors, Dr. Arneil Reyes and Dr. Philip Kuhns and the graduate students, Mr. Andrew Harter, Mr. Robert Smith and Mr. Lloyd Lumata. I would also like to express my gratitude towards the CIRL group, the NHMFL and the NSF for hosting and funding this REU program and for making this wonderful experience possible. Lastly, I would like to extend a special thank you to Dr. Scott Hannahs, Mr. Michael Coleman and Dr. Irinel Chiorescu.

Appendix A

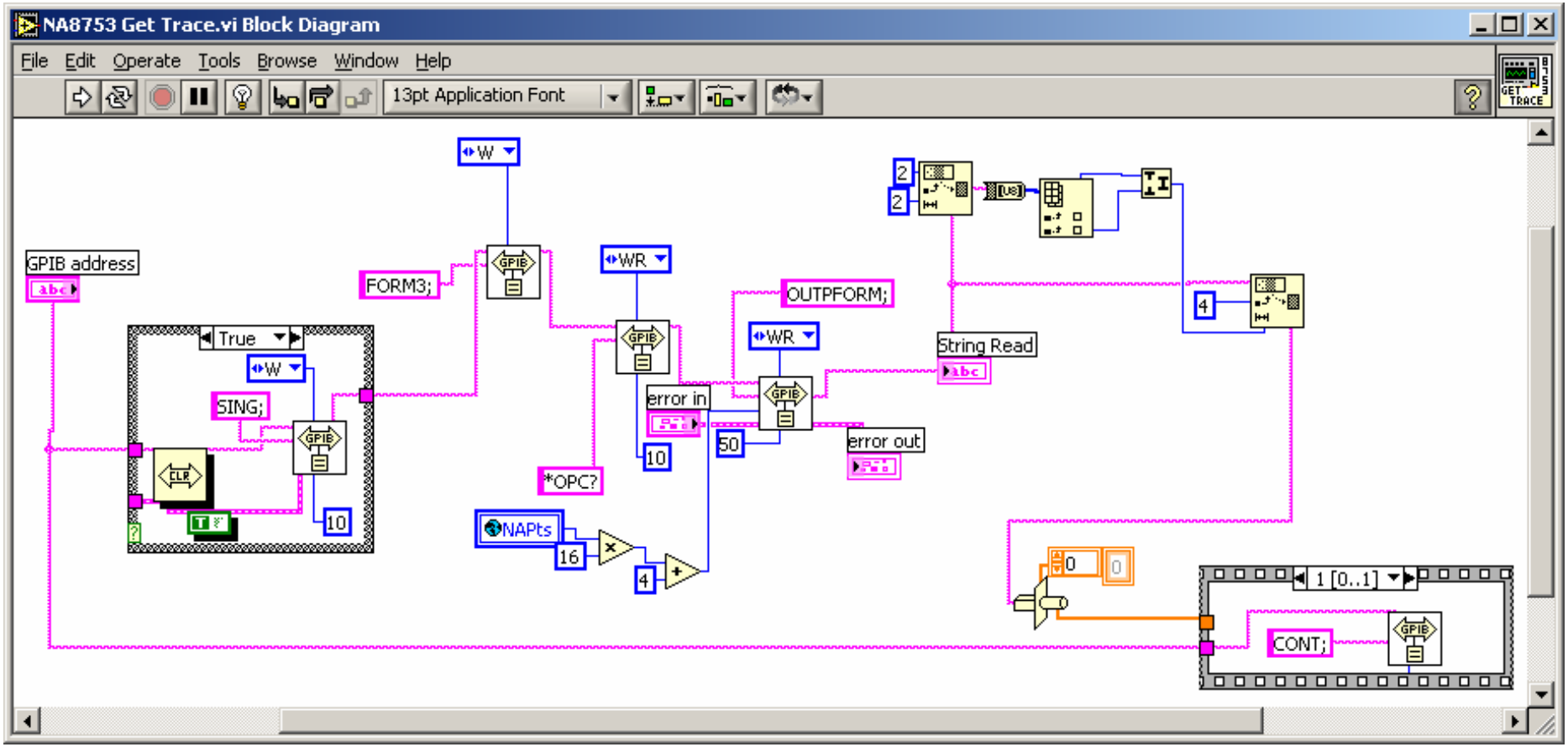
NA8753 Get Trace.vi Block Diagram
File Edit Operate Tools Browse Window Help
13pt Application Font
GPIB address
True
W
SING;
CLR
10
FORM3;
WR
*OPC?
NAPts
16
4
10
error in
50
OUTPFORM;
WR
error out
2
2
String Read
4
0
0
1 [0..1]
CONT;

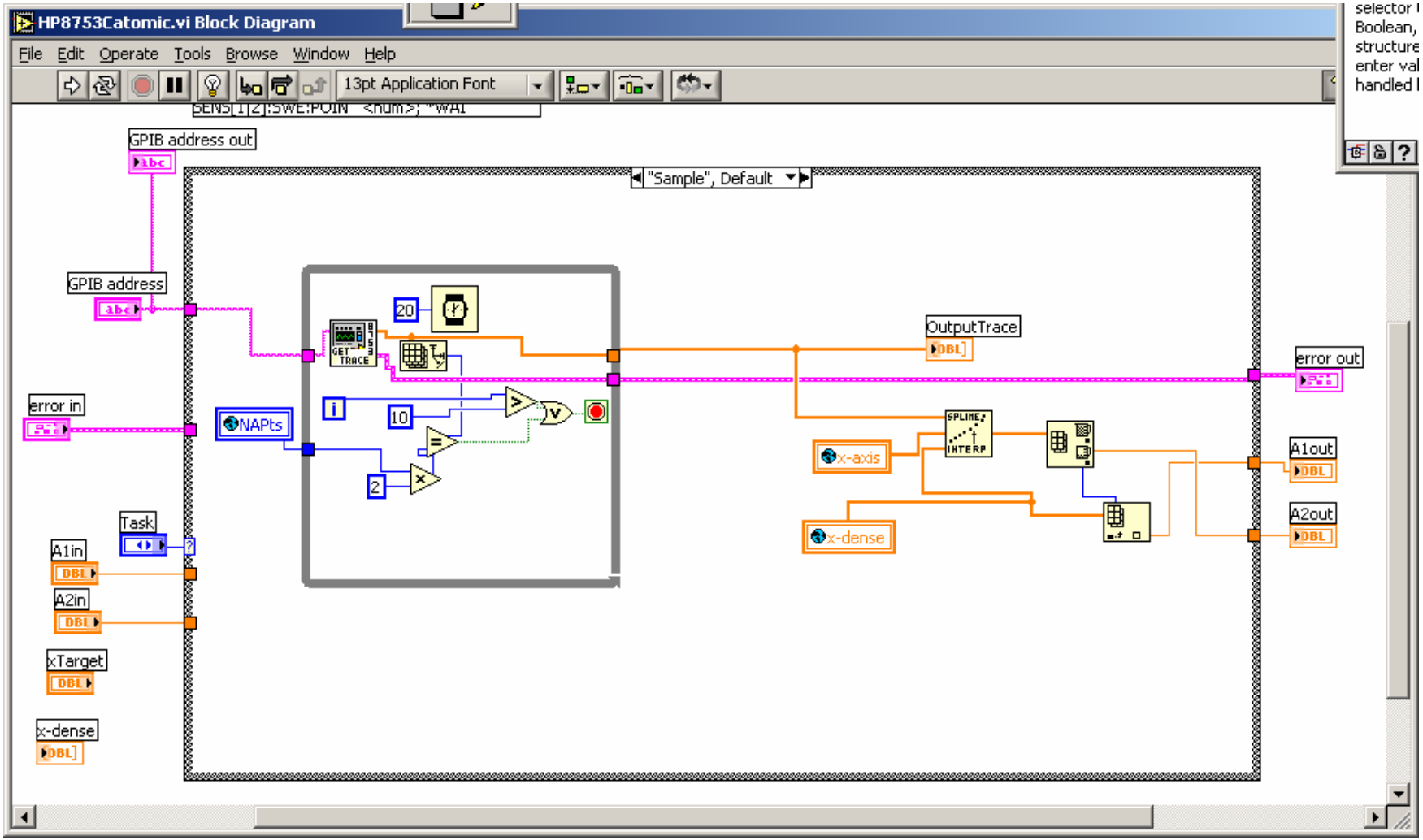
HP8753Catomic.vi Block Diagram
File Edit Operate Tools Browse Window Help
13pt Application Font
GPIB address out
"Sample", Default
GPIB address
error in
NAPts
Task
A1in
A2in
xTarget
x-dense
20
10
2
GET TRACE
OutputTrace
x-axis
x-dense
SPLINE INTERP
error out
A1out
A2out

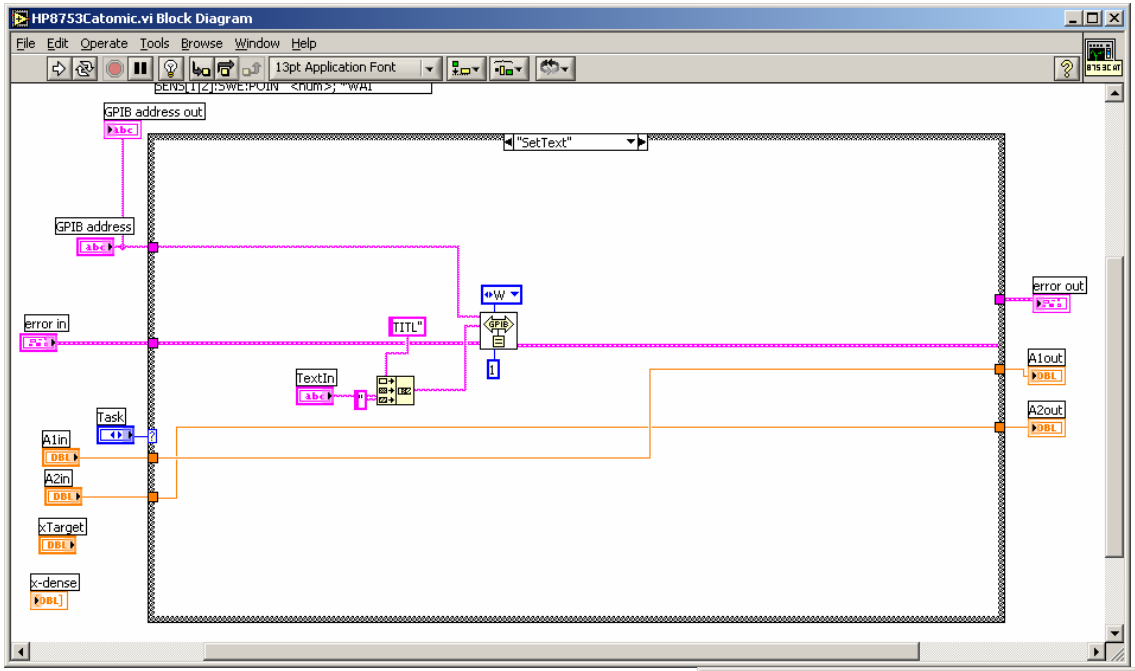
HP8753Catomic.vi Block Diagram
File Edit Operate Tools Browse Window Help
13pt Application Font
GPIB address out
"SetText"
GPIB address
error in
TITL"
TextIn
Task
A1in
A2in
xTarget
x-dense
error out
A1out
A2out

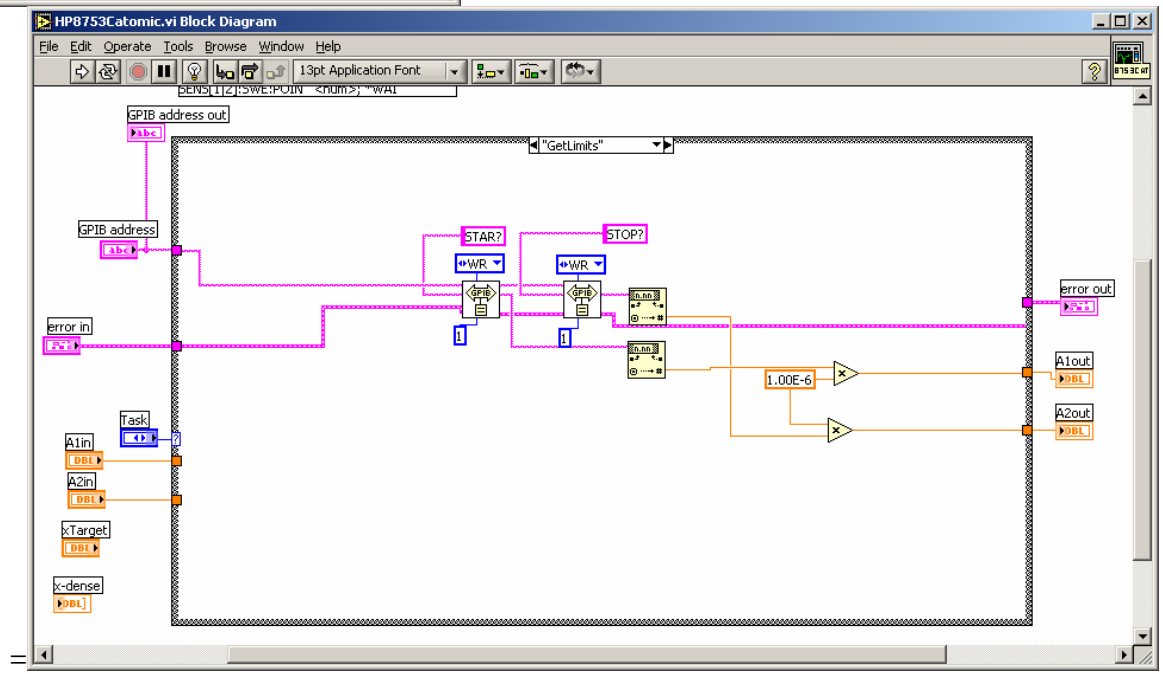
HP8753Catomic.vi Block Diagram
File Edit Operate Tools Browse Window Help
13pt Application Font
GPIB address out
"GetLimits"
GPIB address
STAR?
STOP?
error in
1.00E-6
Task
A1in
A2in
xTarget
x-dense
error out
A1out
A2out

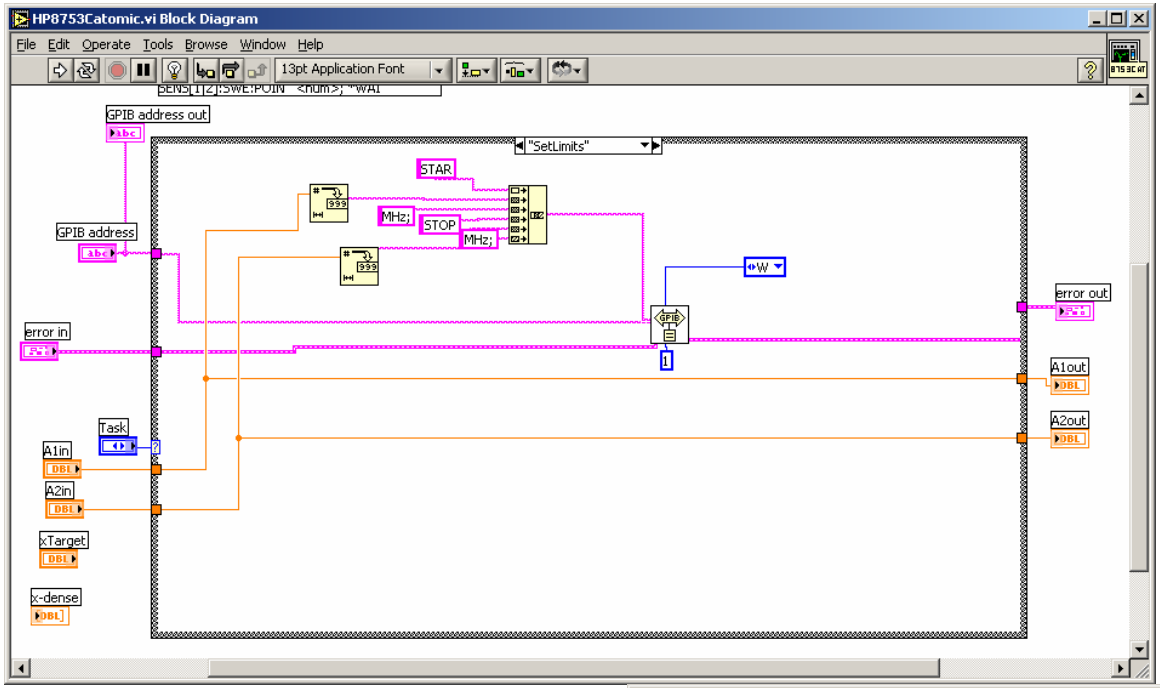
HP8753Catomic.vi Block Diagram
File Edit Operate Tools Browse Window Help
13pt Application Font
GPIB address out
"SetLimits"
STAR
MHz;
STOP
MHz;
GPIB address
error in
error out
A1out
A2out
Task
A1in
A2in
xTarget
x-dense

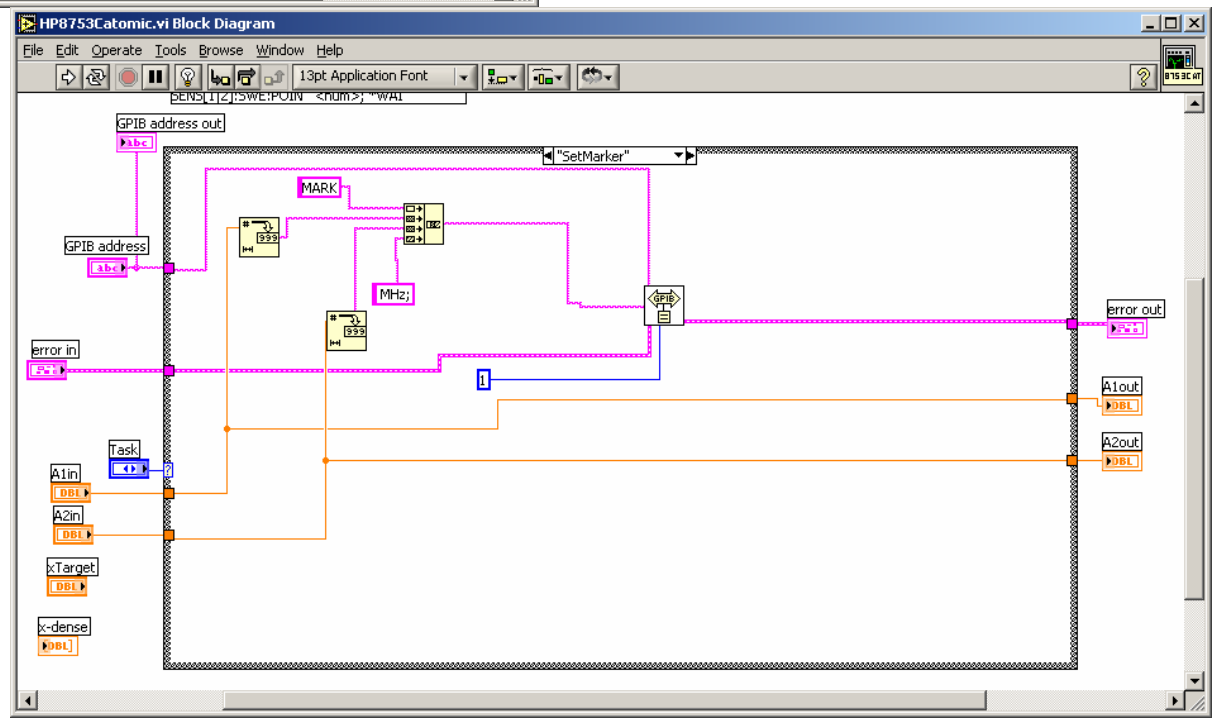
HP8753Catomic.vi Block Diagram
File Edit Operate Tools Browse Window Help
13pt Application Font
GPIB address out
"SetMarker"
MARK
MHz;
GPIB address
error in
error out
A1out
A2out
Task
A1in
A2in
xTarget
x-dense

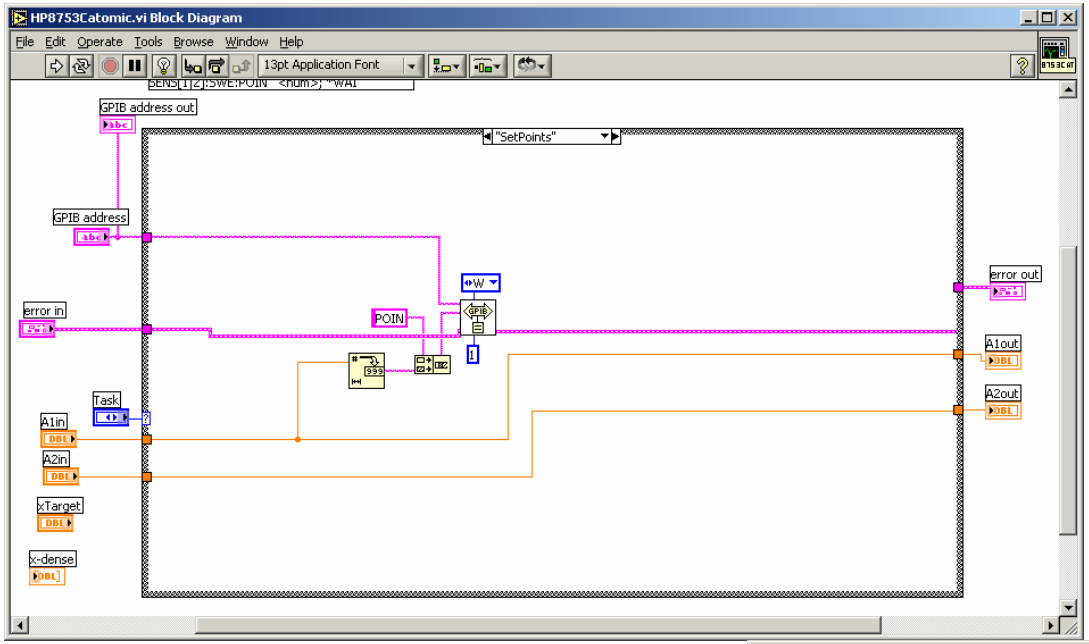
HP8753Catomic.vi Block Diagram
File Edit Operate Tools Browse Window Help
13pt Application Font
GPIB address out
"SetPoints"
GPIB address
error in
W
POIN
1
error out
A1out
A2out
Task
A1in
A2in
xTarget
x-dense

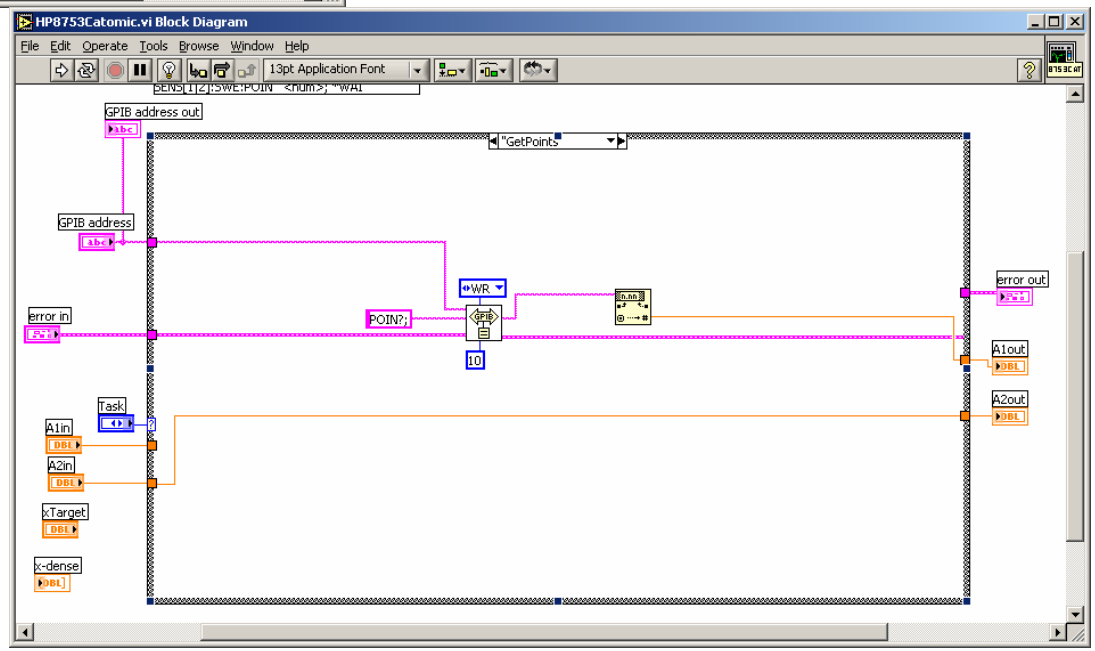
HP8753Catomic.vi Block Diagram
File Edit Operate Tools Browse Window Help
13pt Application Font
GPIB address out
"GetPoints"
GPIB address
error in
WR
POIN?;
10
error out
A1out
A2out
Task
A1in
A2in
xTarget
x-dense

Appendix B

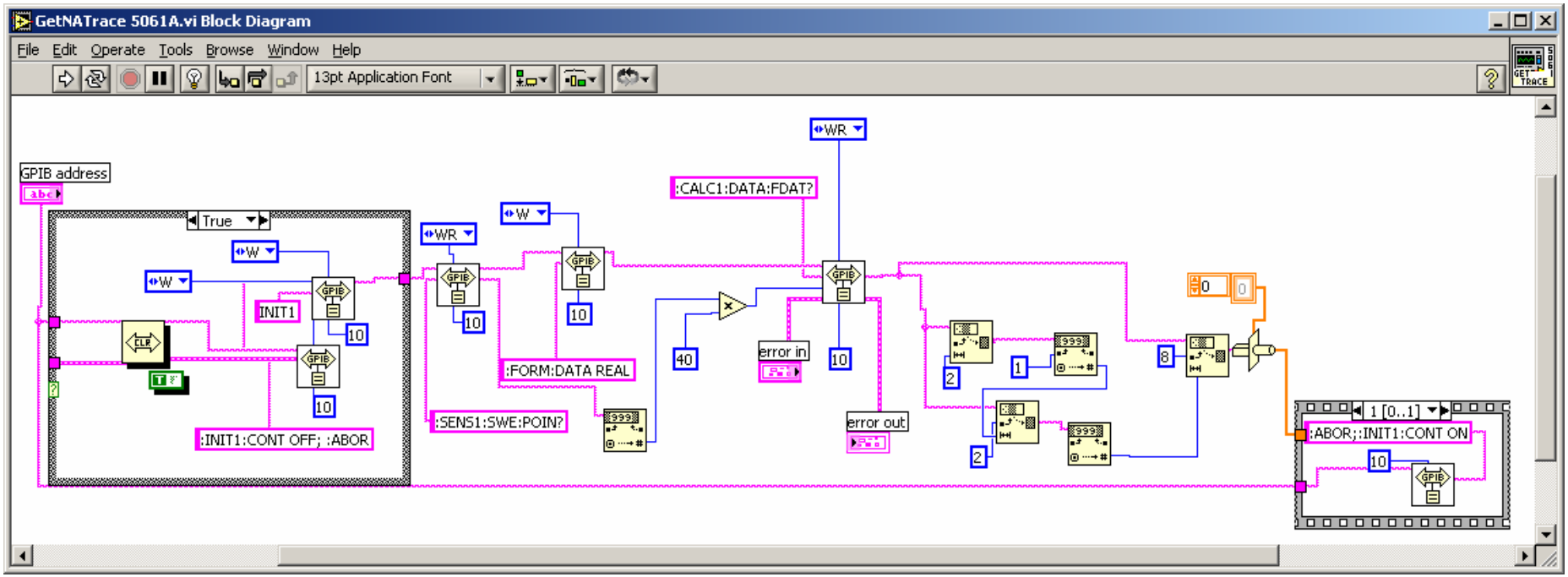
GetNATrace 5061A.vi Block Diagram
File Edit Operate Tools Browse Window Help
13pt Application Font
GPIB address
True
W
INIT1
10
:INIT1:CONT OFF; :ABOR
WR
:SENS1:SWE:POIN?
:FORM:DATA REAL
:CALC1:DATA:FDAT?
40
error in
error out
2
1
8
0
1 [0..1]
:ABOR;:INIT1:CONT ON

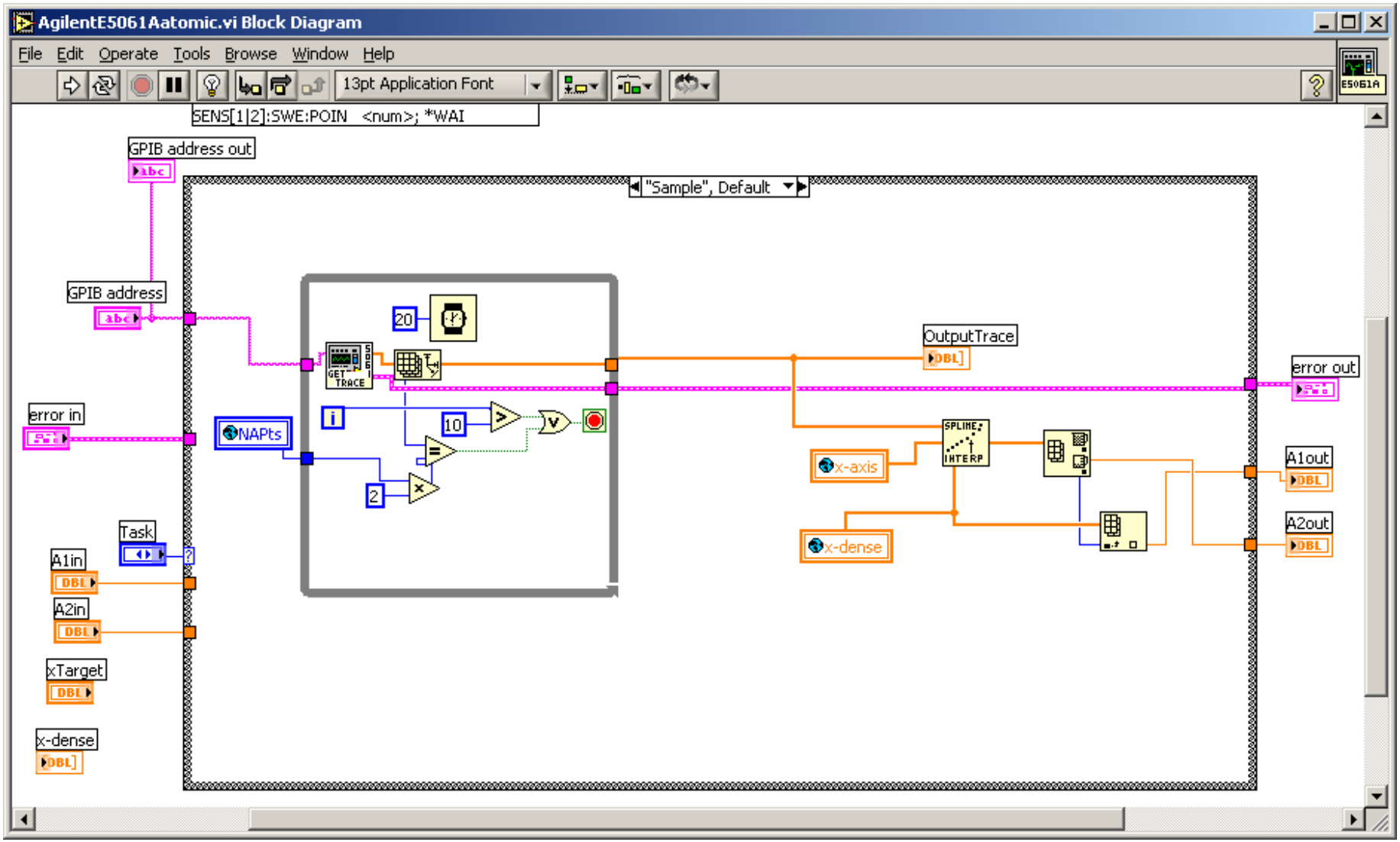
AgilentE5061Aatomic.vi Block Diagram
File Edit Operate Tools Browse Window Help
13pt Application Font
SENS[1|2]:SWE:POIN <num>; *WAI
GPIB address out
"Sample", Default
GPIB address
error in
NAPts
Task
A1in
A2in
xTarget
x-dense
20
10
2
GET TRACE
OutputTrace
x-axis
x-dense
SPLINE INTERP
error out
A1out
A2out

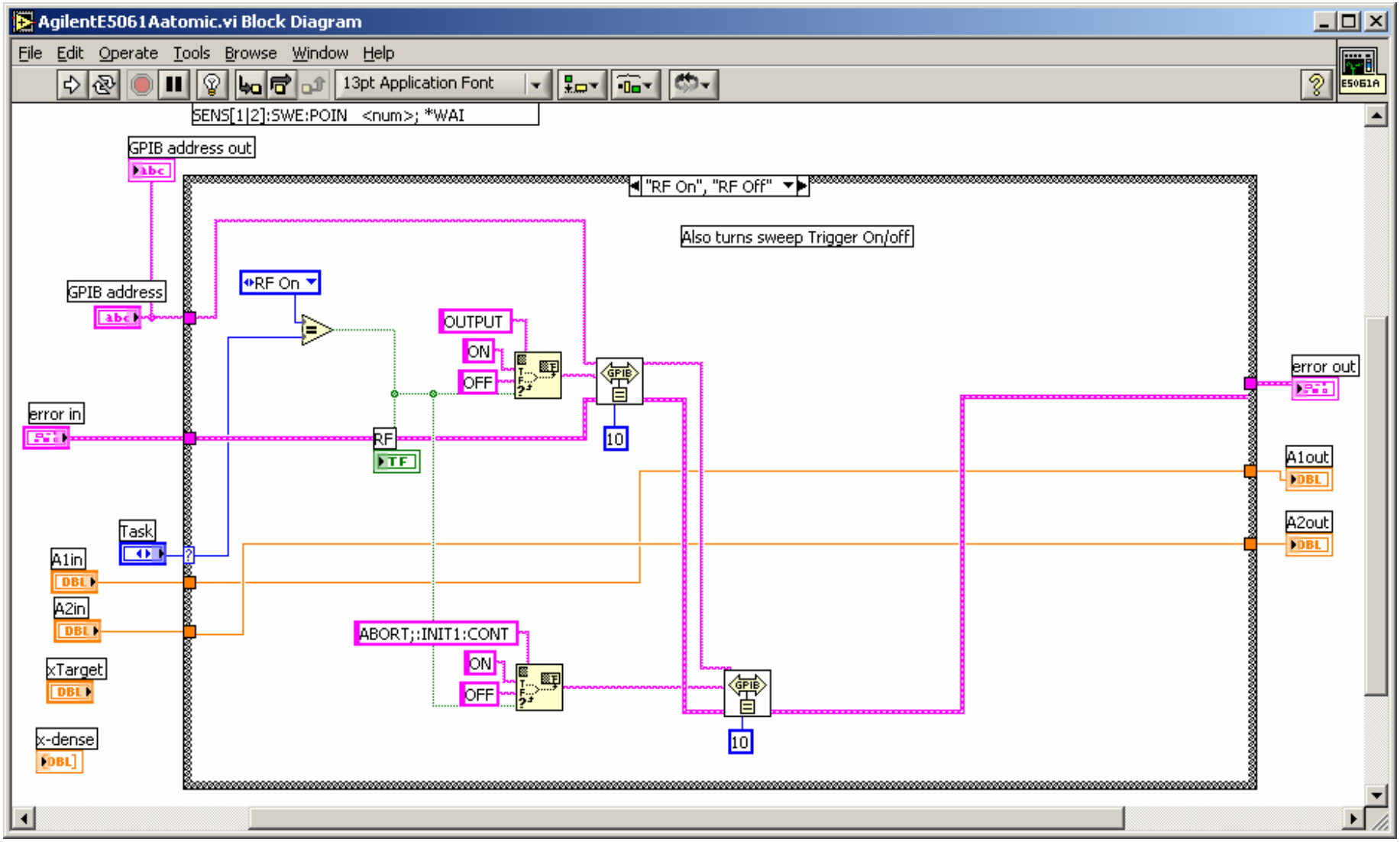
AgilentE5061Aatomic.vi Block Diagram
File Edit Operate Tools Browse Window Help
13pt Application Font
SENS[1|2]:SWE:POIN <num>; *WAI
GPIB address out
"RF On", "RF Off"
Also turns sweep Trigger On/off
GPIB address
RF On
OUTPUT
ON
OFF
error in
RF
10
error out
A1out
A2out
Task
A1in
A2in
ABORT;:INIT1:CONT
ON
OFF
xTarget
x-dense
10

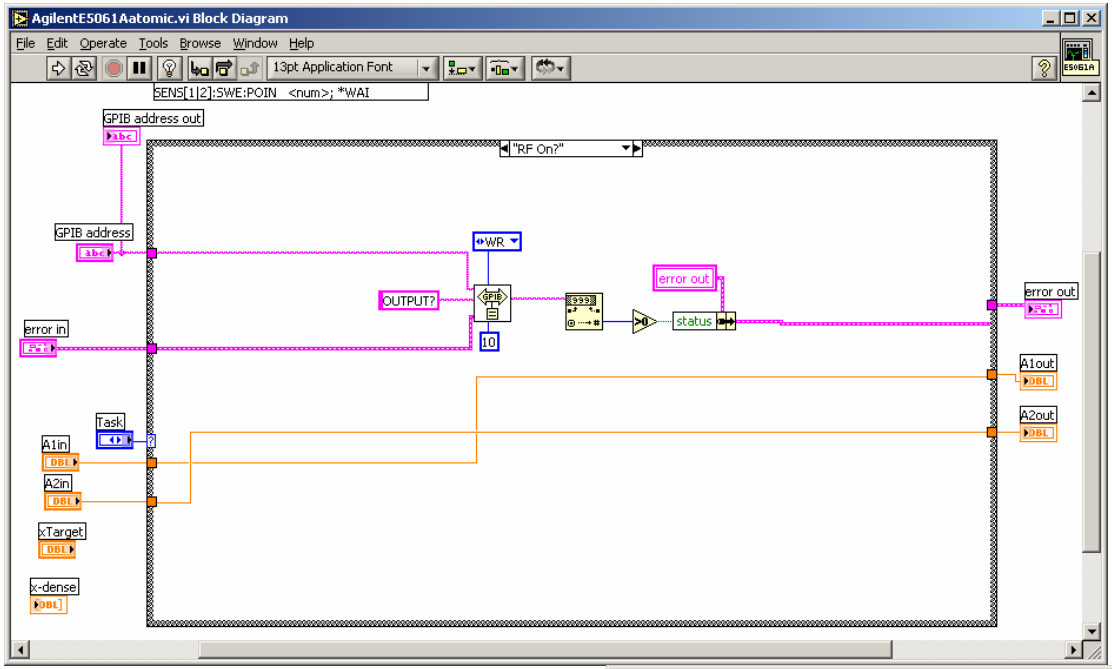
AgilentE5061Aatomic.vi Block Diagram
File Edit Operate Tools Browse Window Help
13pt Application Font
SENS[1|2]:SWE:POIN <num>; *WAI
GPIB address out
"RF On?"
GPIB address
WR
OUTPUT?
error out
status
error in
10
Task
A1in
A2in
xTarget
x-dense
A1out
A2out

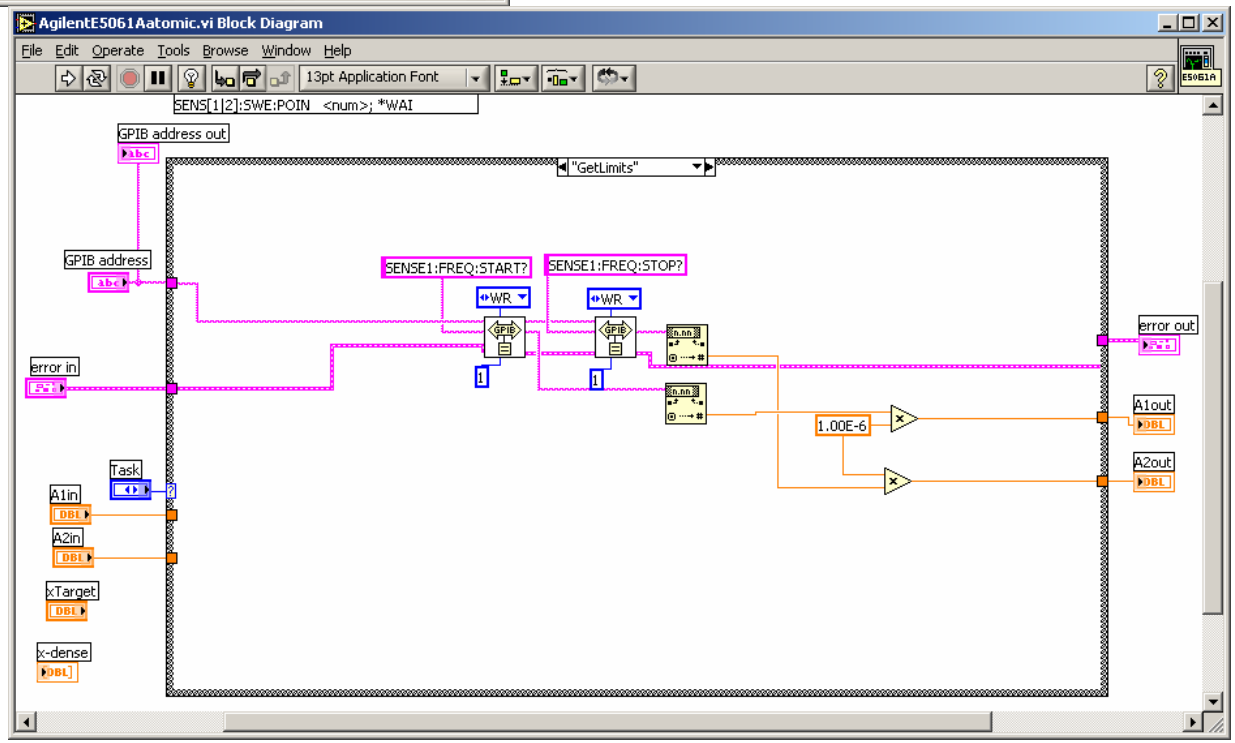
AgilentE5061Aatomic.vi Block Diagram
File Edit Operate Tools Browse Window Help
13pt Application Font
SENS[1|2]:SWE:POIN <num>; *WAI
GPIB address out
"GetLimits"
GPIB address
SENSE1:FREQ:START?
SENSE1:FREQ:STOP?
WR
error in
error out
1.00E-6
A1out
A2out
Task
A1in
A2in
xTarget
x-dense

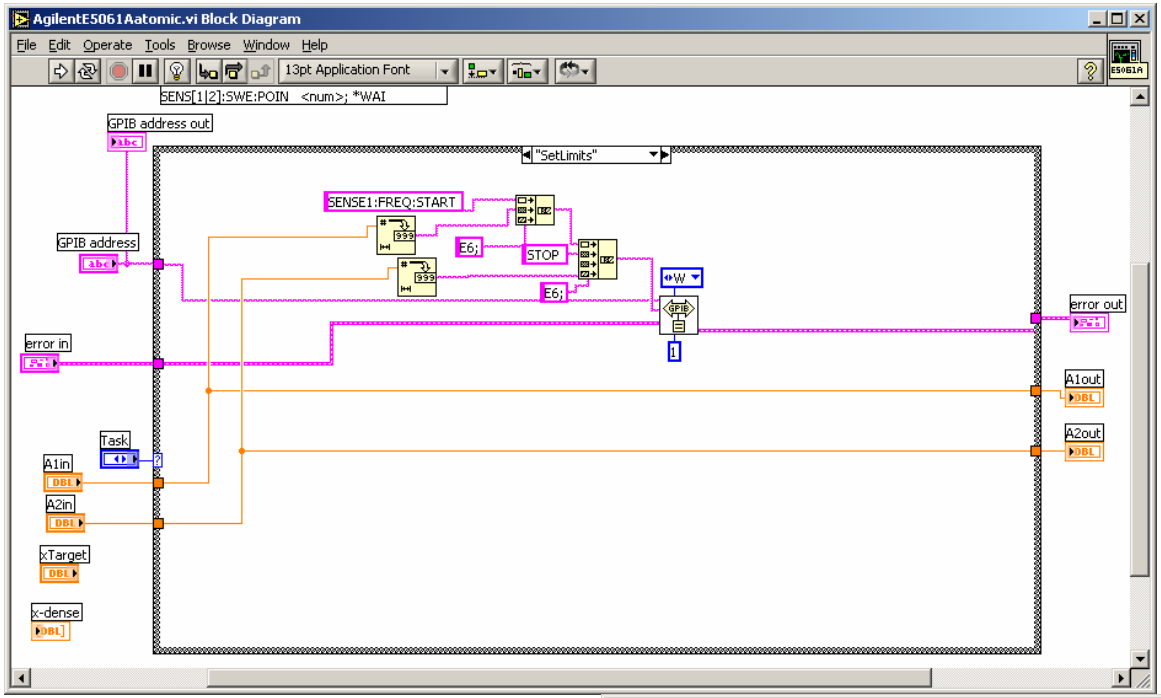
AgilentE5061Aatomic.vi Block Diagram
File Edit Operate Tools Browse Window Help
13pt Application Font
SENS[1|2]:SWE:POIN <num>; *WAI
GPIB address out
"SetLimits"
SENSE1:FREQ:START
E6;
STOP
E6;
GPIB address
error in
error out
A1out
A2out
Task
A1in
A2in
xTarget
x-dense

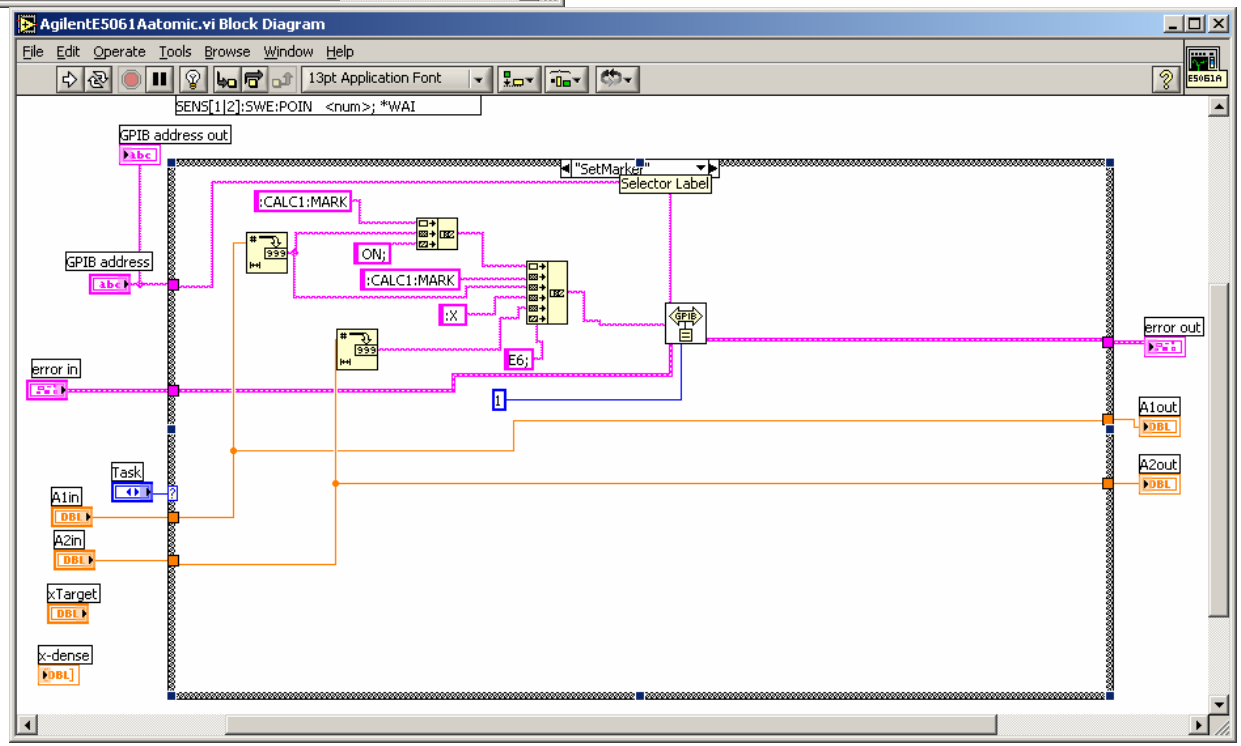
AgilentE5061Aatomic.vi Block Diagram
File Edit Operate Tools Browse Window Help
13pt Application Font
SENS[1|2]:SWE:POIN <num>; *WAI
GPIB address out
"SetMarker"
Selector Label
:CALC1:MARK
ON;
:CALC1:MARK
:X
E6;
GPIB address
error in
error out
A1out
A2out
Task
A1in
A2in
xTarget
x-dense

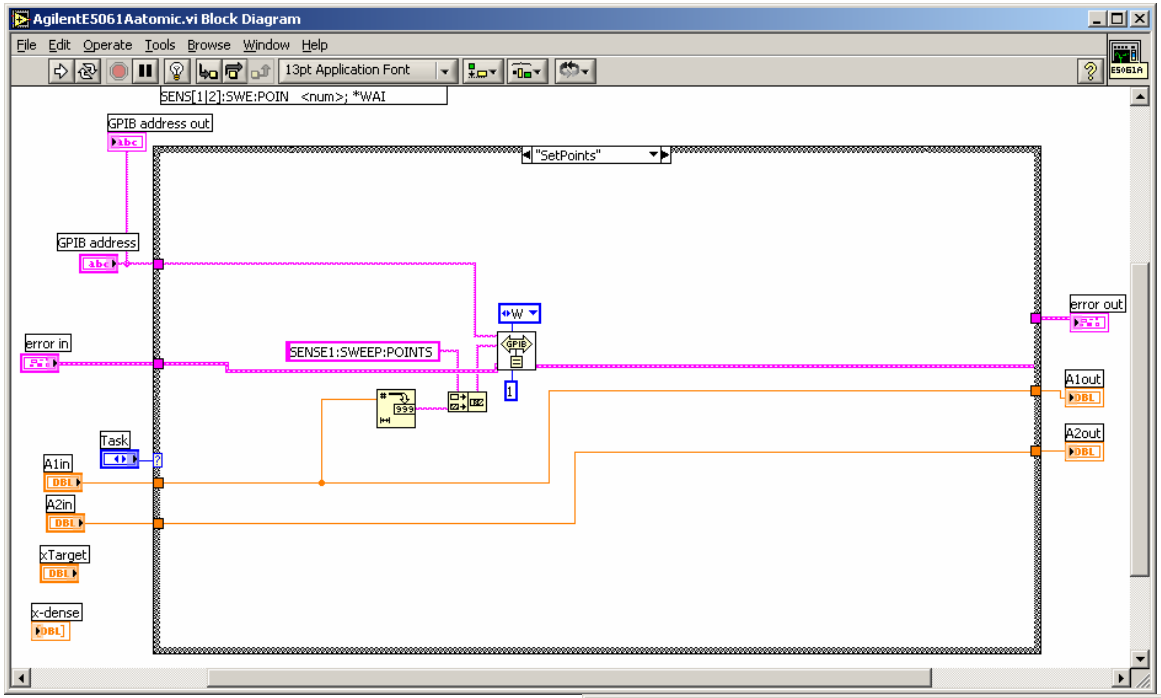
AgilentE5061Aatomic.vi Block Diagram
File Edit Operate Tools Browse Window Help
13pt Application Font
SENS[1|2]:SWE:POIN <num>; *WAI
GPIB address out
"SetPoints"
GPIB address
error in
SENSE1:SWEEP:POINTS
W
1
error out
A1out
A2out
Task
A1in
A2in
xTarget
x-dense

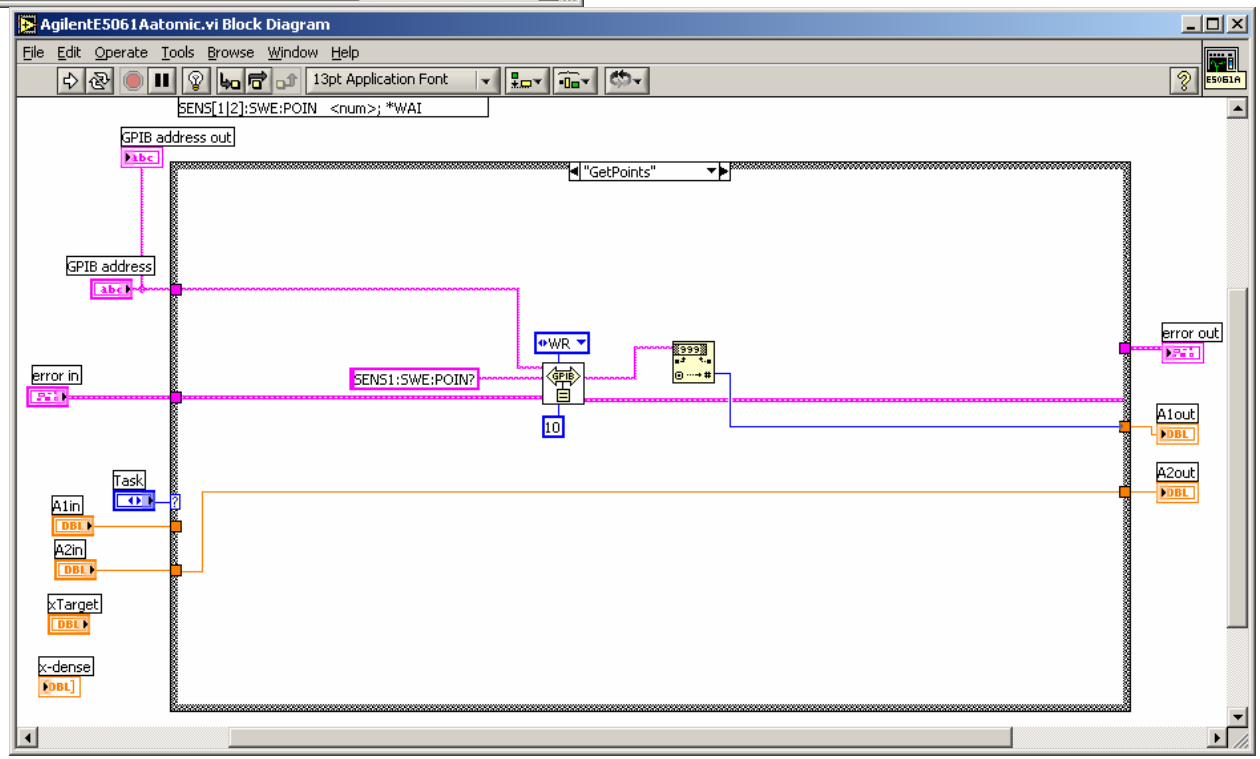
AgilentE5061Aatomic.vi Block Diagram
File Edit Operate Tools Browse Window Help
13pt Application Font
SENS[1|2]:SWE:POIN <num>; *WAI
GPIB address out
"GetPoints"
GPIB address
error in
SENS1:SWE:POIN?
WR
10
error out
A1out
A2out
Task
A1in
A2in
xTarget
x-dense

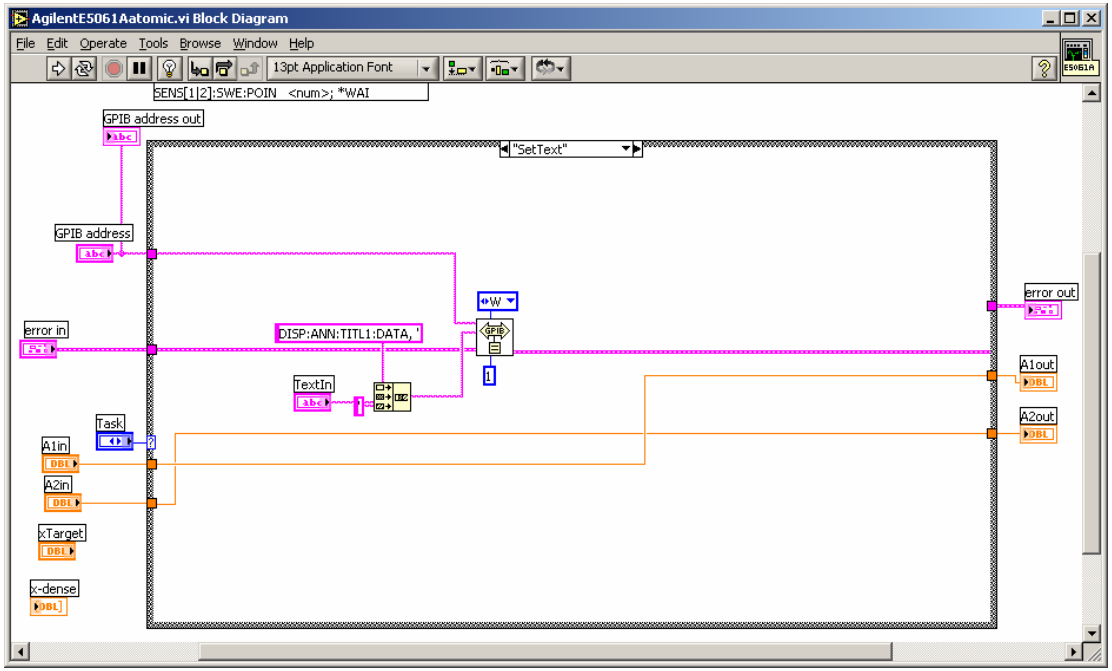
AgilentE5061Aatomic.vi Block Diagram
File Edit Operate Tools Browse Window Help
13pt Application Font
SENS[1|2]:SWE:POIN <num>; *WAI
GPIB address out
"SetText"
GPIB address
error in
DISP:ANN:TITL1:DATA, '
W
GPIB
1
TextIn
Task
A1in
A2in
xTarget
x-dense
error out
A1out
A2out

Appendix C

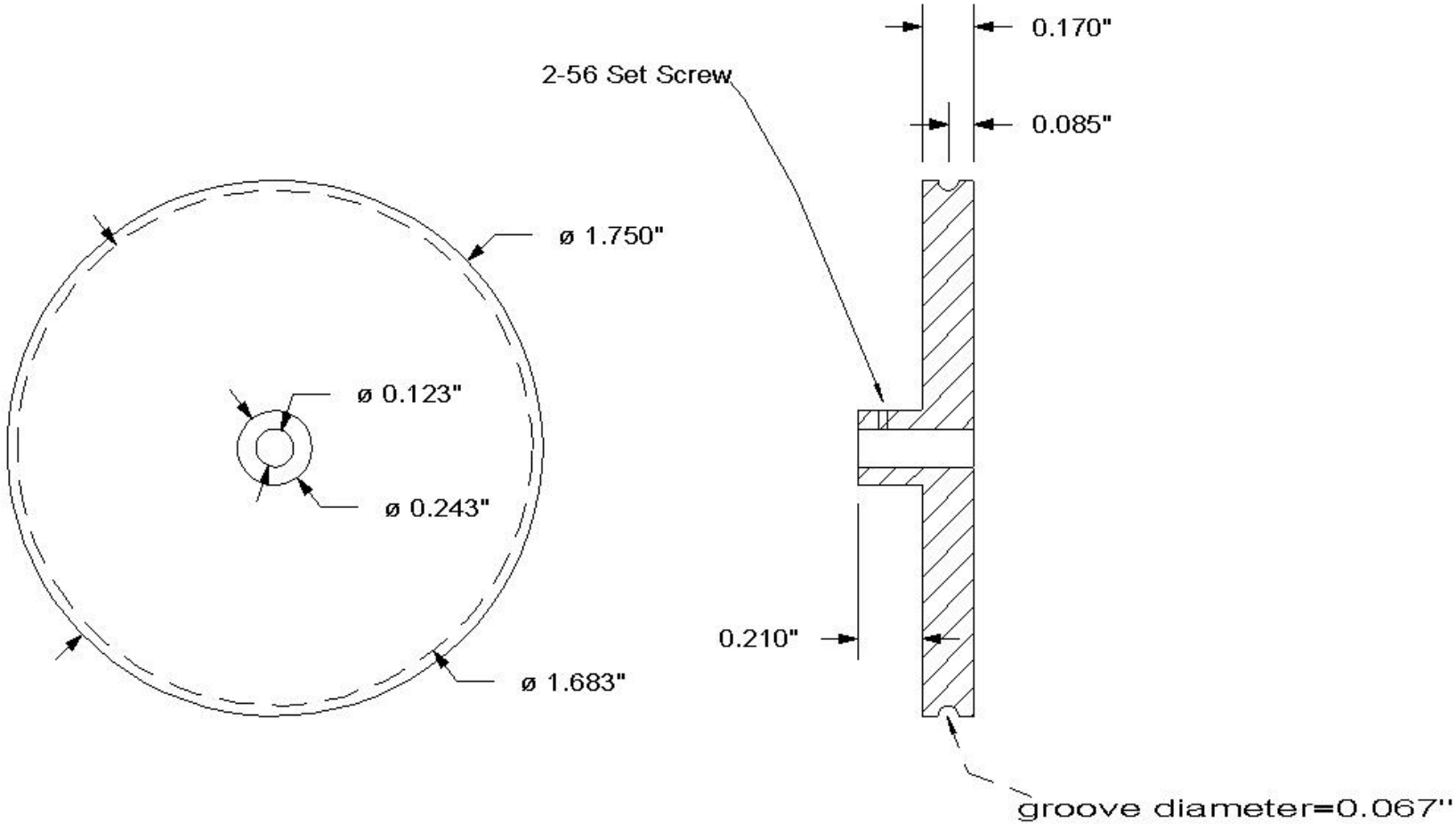

NATIONAL HIGH MAGNETIC FIELD LABORATORY 0 FIELD PROBE PART	Drawing No. 1
DESCRIPTION: Wheels for 0 T field probe capacitors	DATE: 06-14-05
MATERIAL: Brass / SCALE: 2:1	CONTACT: Tomi Herceg 4-2254 cirl13@magnet.fsu.edu
TOLERANCE: 0.001" unless specified	BUDGET:
QUANTITY: 2	3601

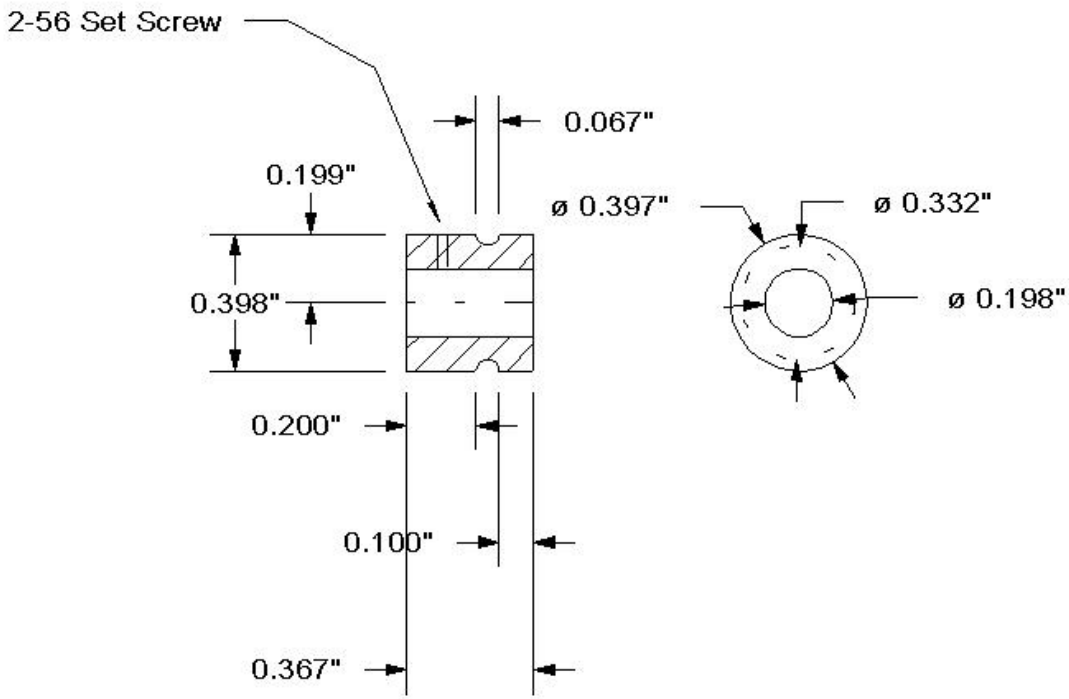

NATIONAL HIGH MAGNETIC FIELD LABORATORY 0 FIELD PROBE PART	Drawing No. 2
DESCRIPTION: Wheels for 0 T field probe motors	DATE: 06-14-05
MATERIAL: Brass / SCALE: 2:1	CONTACT: Tomi Herceg 4-2254 cirl13@magnet.fsu.edu
TOLERANCE: 0.001" unless specified	BUDGET:
QUANTITY: 2	3601