Balancing a ^{1}H – ^{19}F NMR Probe Circuitry

Ran Kathryn Chang*
William Brey, Mentor
National High Magnetic Field Laboratory
Florida State University, Tallahassee, FL 32310

*Undergraduate student of
Department of Electrical Engineering and Mathematics
University of Maryland, College Park, MD 20742

Nuclear magnetic resonance, or NMR, probes are of fundamental importance in NMR spectroscopy. The probes are utilized as paraphernalia to NMR in studying chemical structure of complex molecules such as the membrane proteins. The circuit configuration of the probe is based on the LC circuits resonating at radio frequency, or RF. In particular, this research project focuses on the analysis and design of a ^{1}H – ^{19}F NMR probe due to the inefficient commercially designed ones presently available. In an effort to enhance the performance of a ^{1}H – ^{19}F NMR probe, a method in balancing the probe circuitry has been explored at the National High Magnetic Field Laboratory.

INTRODUCTION

Nuclear Magnetic Resonance, or NMR is a phenomenon that occurs when the nuclei of certain atoms are immersed in a static magnetic field and exposed to a second oscillating magnetic field. [4] The sample, placed inside the sample coil of the probe, is engaged in a static magnetic field enforcing at RF. The probe is then inserted into the bore of a superconducting magnetic, which produces a second oscillating magnetic field. Through this process, NMR provides information on not only the molecular structure, but also on the internal mobility and the overall molecular motion of any molecule. Because the nuclei of many atoms possess magnetic moments and angular momenta, NMR can be applied to meticulously examine and study these molecules.

In addition, NMR is a non-destructive way of examining the chemical structure as well as the molecular motion of complex molecules. Thus, it is quickly becoming an essential tool for researchers. It may well be the key to fully understanding, and perhaps even curing, the common yet complex disease of influenza. The contagious respiratory illness, more popularly known as "the flu," can be induced by influenza A viruses that carry M2 proteins. Using NMR, we can study the structure of this protein and come closer to finding a cure for this particular strain of the flu.

A key step in studying the M2 protein lies upon the need for an efficient ^{1}H – ^{19}F NMR probe. A vital improvement in NMR probes for membrane protein studies is to ensure the RF field homogeneity of the sample, which is placed inside the sample coil of the probe. Potentially, this criterion can be achieved by balancing the probe circuitry. Such scheme is of great interest because of its efficacy in yielding to a higher efficiency in addition to its novelty in theory.

RELATED FIELDS

- Chemistry – Study of the chemical structure and the biological molecular properties of the membrane protein samples
- Physics – Use of quantum mechanical and classical laws to formulate and study the physical processes and interaction between the nuclei with applied magnetic field
- Mathematics – Use of mathematical technique, Fourier Transform for converting time domain data to frequency domain data, and vice versa, to interpret NMR spectrum produced
- Engineering – Use of the simulation software, Eclipse, integrating engineering methods to obtain approximate capacitor values necessary for the physical building of the actual circuit model of the probe

PROBE CIRCUITRY

The setup of the ^{1}H – ^{19}F NMR probe, shown in Figure 1, is a simple LC resonant circuit which consists of coupling inductors and capacitors in series via grounded capacitors. The set of capacitor values is determined from running the Eclipse simulation software. This is achieved by tuning the resonances to the assigned resonance frequencies on a 3-dB frequency graph while matching the impedance of the circuit to the 50 ohms line on a Smith Chart, shown in Figure 2. When running RF pulses, this configuration yields a single-port double-resonance excitation. Furthermore, the magnetic field is excited at two dissimilar frequencies of 781 MHz and 830 MHz within the sample coil L2 that corresponds to fluorine and proton channels, respectively. Finally, it can be easily verified that this circuit configuration is unbalanced; the magnetic field pulse inside the sample coil is asymmetrical.

(A)

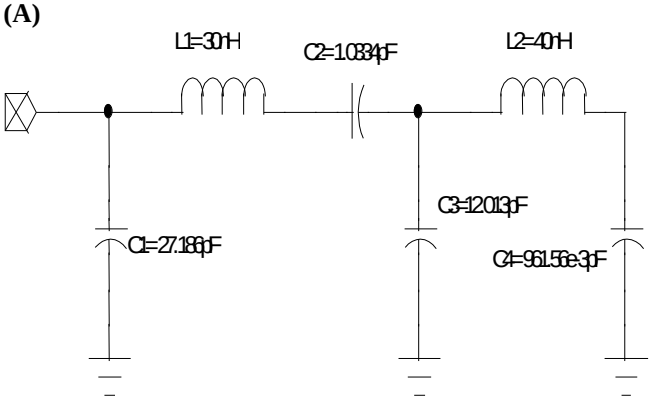

(B)

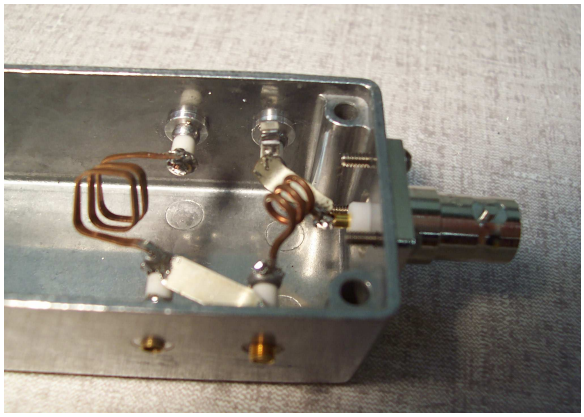

Figure 1. (A) The ^{1}H – ^{19}F NMR probe circuit schematic with simulated capacitor values. (B) The corresponding circuit model.

(A)

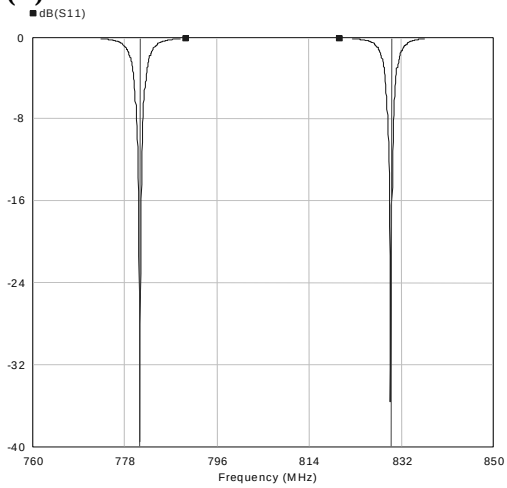

(B)

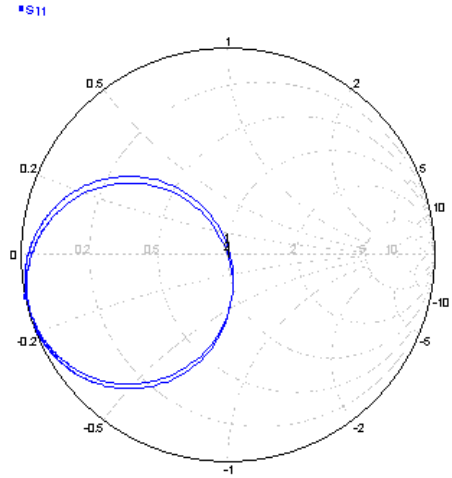

Figure 2. (A) Eclipse simulation of the double resonances tuned to the assigned resonance frequencies on a 3-dB frequency graph. (B) Eclipse simulation of the matched impedance of the circuit to the 50 ohms line on a Smith Chart.

CIRCUIT BALANCING THEORY

A balanced circuit essentially focuses on the balancing of the sample coil L2. Specifically, this is achieved by inducing an equal impedance value on both terminals of the sample inductor. Since the sample tube is placed in the center of the sample coil, the maximum possible magnetic field strength is desiderated to be in the location of the sample tube. However, it has been shown by NMR researchers that the distribution of the magnetic field strength wavelength, $\lambda/2$, along the sample coil axis is oftentimes skewed to the right relative to the midpoint. As a result, the unbalanced circuit configuration adversely

affects the overall performance of the NMR experiment; provoking a less RF homogeneity of the sample coil in the sweeping output.

EXPERIMENTAL DESCRIPTION

One way to check for the balancing of the ^{1}H - ^{19}F NMR probe circuitry can be done through simulations on Eclipse. The first step is to program the layout of the circuit in the NetList on Eclipse analytically. Then, the circuit needs to be tuned and matched digitally at resonance frequencies upon running simulations. After plotting the real and imaginary ac voltages on either terminal of the sample coil, one can determine if the circuit is balanced by the magnitude of the voltages at the resonating frequencies, 781 MHz and 830 MHz. If they are equal, then the circuit is balanced. In addition, the voltage values at these nodes need to be 180 degrees out of phase in order to cancel each other out.

Another way to check for the balancing of the probe circuitry can be automated via an 8753ES S-Parameter network analyzer. This approach requires the physical build-up of the circuit model employing the capacitor values obtained from the simulations in Eclipse. After connecting the port of the circuit model to the network analyzer, the subsequent procedure involves the same process of tuning and matching the variable capacitors of the circuit at the resonating frequencies. However, this is more difficult to perform as it is done manually. Finally, when one end of a wiring connector is grounded while the other end is linked to the middle of the sample coil, the circuit is balanced if the two resonating peaks remain unchanged on the plot of the network analyzer.

DISCUSSION

The ultimate goal of the project is to balance this ^{1}H – ^{19}F NMR probe circuit. The analysis performed emphasizes on the mutual capacitor C3, which is in control of the frequency gap between the two resonances. Namely, the mutual capacitance of C3 and the separation of the two resonance frequencies are inversely proportional. In this particular configuration of dual resonance frequencies of 781MHz and 830MHz for the ^{1}H - ^{19}F NMR probe circuitry, the frequency gap is relatively small; thus C3 assumes a large capacitance value. Consequently, the impedance of the mutual capacitor is relatively small because of the excitation at RF.

Ideally, since the left side of the sample coil acts as a virtual ground to the left of the sample coil, adding an extra capacitor in series with L2 should achieve a balanced circuit configuration**.** Figure 4 shows the arrived figure of merit. This additional capacitor should correspond in capacitance value to the capacitor to the right of the sample coil L2 in order to arrive at approximately equal impedance on both ends of L2.

Through testing of the arrived figure of merit, utilizing both methods mentioned in experimental description, the circuit is found to be balanced only at one resonating frequency, 781 MHz.

(A)

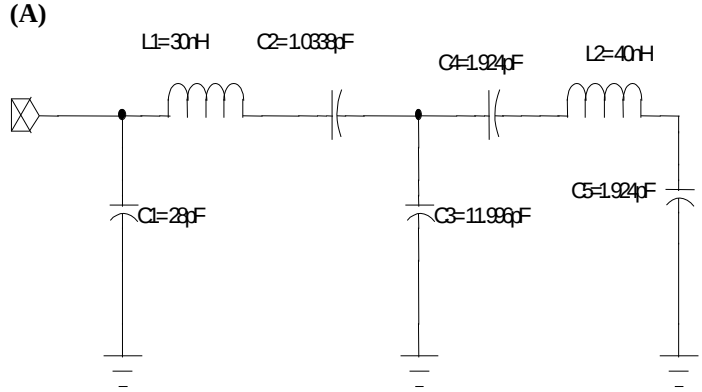

(B)

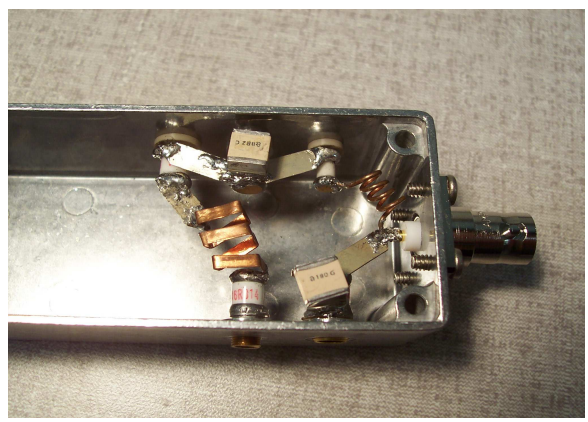

Figure 4. (A) The ^{1}H – ^{19}F NMR probe circuit is balanced at 781 MHz upon appending an additional capacitor. (B) The corresponding circuit model.

RESULT

It may seem trivial to add a capacitor in series with another capacitor, yet the impact of the appended capacitor has on the overall circuit is profoundly significant. Although it does not produce a balanced ^{1}H - ^{19}F NMR probe circuitry as expected, the change made to the initial circuit provides balancing at one of the resonating frequencies, 781 MHz. At 781 MHz, the arrived circuitry configuration yields a better efficiency in the fluorine channel as it considerably improves the RF field homogeneity for the sample inside the sample inductor. In

fact, it is more favorable this way, as opposed to having the other way around since the fluorine channel is of greater importance in the M2 protein study than the proton channel.

FUTURE WORK

Due to the limited amount of research time at the National High Magnetic Field Laboratory, the design and analysis of a $^{1}H - ^{19}F$ NMR probe is yet to be finished. Besides thoroughly balancing the $^{1}H - ^{19}F$ NMR probe circuit at both the resonating frequencies, there are various other improvements to the initial circuit that can be made. One possible improvement is to examine the effect of replacing the ordinary lumped-circuit elements such as inductors and capacitors connected in parallel by wires with transmission lines. Since the ordinary lumped-circuit elements no longer serve as practical circuit elements at RF, the circuit schematics may fail to function in practicality.

Another feature to improve the initial circuit is to make use of a cavity resonator, which confines electromagnetic fields inside so that the current flows inside the enclosure surrounded by conducting wall; thus eliminating radiation and high resistance effect.

KNOWLEDGE GAINED

In the entire course of my REU experience at the National High Magnetic Field Laboratory, I have learned a lot about Nuclear Magnetic Resonance and have gained much insight into the research process. I learned how to apply what I learned from school to new problems that I encounter in research. I also learned how to work together with people who come from different education background and disciplines on a same research project. From working together with a biochemistry graduate student, I have absorbed knowledge in chemistry that is closely related to NMR. Through it all, I learned how convoluted and tedious the real-world research process can be. Knowing what your goals are for the research is one thing; the actual process of carrying them out consists of numerous exacting challenges. Most importantly, I learned the genuine definition of science, endless possibilities in exploring the undiscovered and the unknown–and how it intermingles with research.

ACKNOWLEDGEMENT

I thank my mentor, Dr. William Brey of the RF program in the NMR Spectroscopy and Imaging department at the National High Magnetic Field Laboratory for his generous assistance and patience in aiding my research. My research and work would not have been possible without him. In addition, I thank the rest of the RF group, Saikat Saha, Peter Gor'kov, and Kiran Shetty for their support and guidance during my research. Also, I am very grateful to Milton Truong, a biochemistry graduate student of Florida State University, with whom I worked with.

I also thank the entire staff of Center for Integrating Research & Learning at NHMFL for directing the REU program. Lastly, I acknowledge the contribution of National Science Foundation for the much-needed financial support.

REFERENCES

[1] Brey, William W, "Improvements in NMR Probes for Membrane Protein Studies." Educational Media, NHMFL

[2] Hu, Sanlin. "Single-input double-tuned circuit for double resonance nuclear magnetic resonance experiments." Review of Scientific Instruments. Volume 69, Number 2, 1998

[3] Stringer, John A. "Methods for the Analysis and Design of a Solid State Nuclear Magnetic Resonance Probe." Review of Scientific Instruments. Volume 69, Number 9, 1998.

[4] Hornak, Joseph P, "The Basics of NMR." Available at http://www.cis.rit.edu/htbooks/nmr/inside.htm