Resistivity and Quantum Hall Effect of a ZnSe/ZnCdMnSe 2D Hall Bar

William Keim
National High Magnetic Field Laboratory, Los Alamos

The sample employed for measurement of resistivity and the quantum hall effect was a hall bar etched from a chip with a magnetic layer of $Zn_{1-x-y}Cd_xMn_ySe$ surrounded by chlorine doped layers of ZnSe. Measurements were made with a 17 T superconducting DC magnet. While the emphasis of this project was on the probe design, plots of the resistivity matching theoretical predictions were obtained and the quantum hall effect was observed.

Introduction

There were two main aims to this study. The primary aim of the study was the design and construction of a probe that would be used for study of a ZnSe/ZnCdMnSe sample and also later for DC magnet studies of plutonium samples or any other type of samples to be used for this particular magnet. The driving ideas behind the probe were that it needed to be robust, easily adaptable to many samples and many different types of measurements, easily modifiable or repairable to sustain long-term and varied use, and suitable for use in plutonium measurements. The secondary aim of the study was to actually employ the probe on resistivity measurements of the ZnSe/ZnCdMnSe sample.

Probe Theory

The design of the probe involved many different considerations that will be discussed here and final constructed probe presented.

The probe was going to be used in a pumped ^{3}He system, so it consisted of a jacket with an insert. The insert contains the wiring and measurement paraphernalia, while the jacket has a "T" at the top connecting both to the head of the insert, and to a valve connected to the ^{3}He system.

The jacket is shown in Dwg. 1 in the appendix. The KF flange at the top seals to the "T" to allow connection of the valve and the head of the insert. The diameter of the inner tube was chosen to closely match the size of the brass containers to be used for the Pu measurements. The double-walled design at the bottom of the probe is important for a ^{3}He system as it allows for the best cooling inside the jacket. The space in between the two walls is heated to remove as much moisture from the space as possible and then it is sealed with a cold solder. A cold solder is used rather than a weld simply to allow the fitting at the end to be removed, if necessary, so that the space can be blown out again if more moisture needs to be removed. When immersed in liquid helium, the air inside the space between the two walls freezes. When the air freezes a vacuum is created in the space between the two walls, which provides insulation from the ^{4}He that has filled the whole space of the magnet. Thus ^{3}He is not lost and it allows for the most efficient ^{3}He

cooling. The whole jacket is made out of 304 stainless steel .20” wall pipe for strength and low thermal conductivity through the top of the jacket. The top of the jacket is also double walled and a sliding seal is slipped over the top outer wall to seal to the magnet. It is important that the top of the jacket be at least as large as any other section of the jacket so that the sliding seal can be removed and replaced and is not a permanent resident of the jacket. A double wall was used at the top rather than a single wall with a larger diameter to prevent the step in going from the outer pipe to the inner pipe. A step in the middle of the jacket would make it difficult to insert the probe and increase the chances of banging radiation baffles or damaging the wiring. Having the same inner-diameter all the way through the jacket makes inserting the probe a very safe endeavor. The length of the outer pipe at the top was made as small as possible to prevent too much thermal conductivity and was chosen to be no larger than the size of the innermost coil of the magnet so that adjustment to the field-center could be guaranteed.

The insert was also made of 304 stainless steel pipe for strength but the end is designed with the smallest reasonable pipe to prevent conduction of heat up through the tubing. 1/4” pipe was employed at the bottom, and, though flexible with a .0075” wall, the size of the radiation baffles was made to be a very snug fit into the inside of the jacket so that the pipe is guaranteed to be straight when inserted. The top is 1/2” pipe with a thicker wall and is quite strong. The use of G10 composite was considered for sections of the tubing, but ultimately stainless steel was used to get the most strength and also to allow the copper baffles to be soldered on rather than epoxied for added durability. The use of thin pipe also allows all of the wiring to be done on the outside of the tubing making replacement, modifications, repairs, or adjustments vastly easier than if the wiring went through the length of the pipe. Furthermore, wiring on the outside requires a smaller pipe so ease of wiring and low thermal conductivity go hand-in-hand and no sacrifices had to be made. Teflon tape is wrapped around the wires in certain areas to provide some support and protection of the fragile wires.

Two sets of radiation baffles were used, one on the 1/2” pipe and one on the 1/4” pipe. Each set of baffles consists of 4 slotted baffles as shown in Fig 1

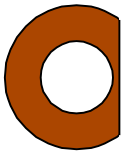

Fig. 1 – Radiation baffle

The placement of the slots on the baffles are staggered and opposing as in Fig. 2

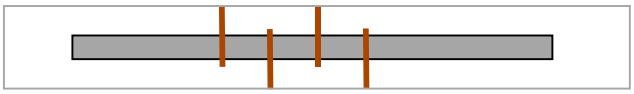

Fig. 2 – Staggering of baffles

so that thermal radiation heading towards the top of the probe is nearly guaranteed to be reflected, but there is a very clear path for gas to flow and for the wires to make their way

to the bottom. A perfectly circular baffle would necessitate holes for the wires complicating the wiring and making modifications more difficult, and it also would not allow any efficient means for pumping on the probe since the gas would be restricted in how it could flow. The baffles were made of a thin section of G10 composite that has a copper layer on one side. The copper allows for good reflection of the radiation while the G10 can absorb what isn't reflected.

The design of the head of the insert was important and the decision was made to have a single cap that contained all of the connectors. With a single head at the top of the probe, the head can be removed by unscrewing it and simply sliding it down the length of the probe over the baffles and everything else, since the KF-40's inner diameter is greater than everything else. The cap with the connectors remains connected to the wires. This allows servicing off the O-ring and anything else that may need servicing. Another logical design is to have a small "T" or cross at the top with multiple heads with different connectors on them. While possibly neater and requiring smaller heads, the O-rings are unserviceable and the probe itself is just less versatile. Construction of the probe with one head is also quite simple. The wiring can be done with the cap off, and it is then just slid on after the fact and secured.

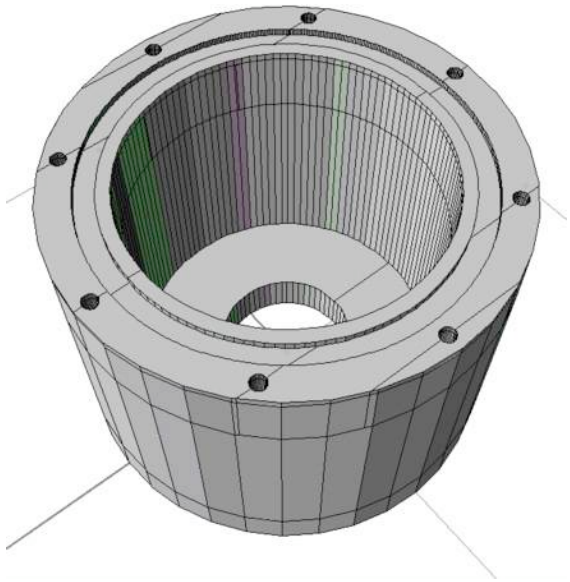

Fig. 3 – Main body of the head

Drawings of the head are shown in the appendix. In order to make the probe the most versatile, a lot of connectors were required. A 4-pin connector is connected to two twisted pairs for the thermometer measurements, and, in addition, six 2-pin connectors were used all connected to an individual twisted pair. It would have been easier and require much less space to have less connectors with more pins per connector, but for the most versatility and ease of connection for any measurement, the 2-pin connectors were used. This prevents any need to make complicated cables containing 6 different wires and worrying about which wire is which. A 2-pin Lemo connector has its own cable that splits into two simple BNC plugs for connection to any device with little to no work. In addition to the twisted pairs, there are 3 coaxial cables connected to SMA headers. With 10 individual connectors and both twisted pair and coaxial cabling, the number of

experiments that can be simultaneously, or at least without have to remove and re-cool the jacket, is vast.

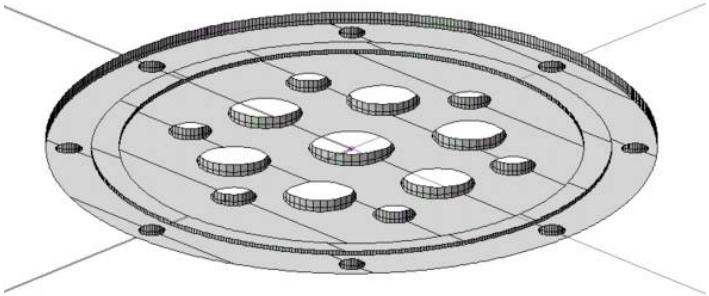

Fig. 4 – The flange for the head, or the cap

This many connectors, though, requires a large cap on the insert and, furthermore, the 1/2" pipe of the insert must somehow be connected to the cap. The most space-saving and symmetrical design is the one showed in Fig. 4. To solve the problem of attaching the 1/2" pipe, a 1/2" thick G10 composite disk was made.

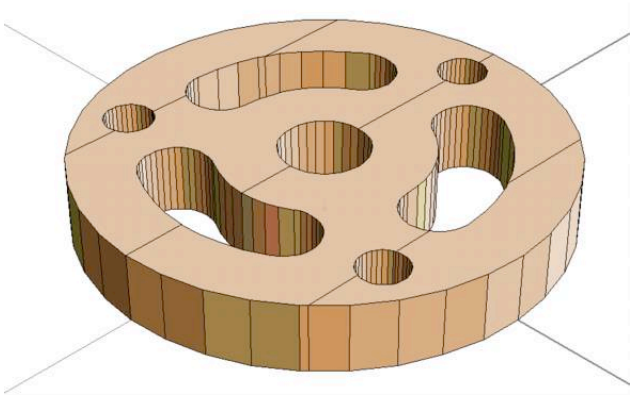

Fig. 5 – G10 disk for securing pipe

The pipe is epoxied into the center of the G10 disk and the large cutouts are used to send the wires through. The three holes are for bolting the G10 disk to the cap. Three of the outermost holes in the top of the cap are for the bolt. The cap must be very thin to accommodate the small SMA connectors, but using Stycast epoxy to secure the bolts to the cap provided a very strong fixation while also being completely leak-proof to helium as is vital for a pumped ^{3}He system. Nuts are then placed on the top and bottom of the G10 disk on the bolts thus securing the G10 disk and thus the pipe of the insert, while also allowing the height of the insert to be adjusted by moving the paired nuts up and down so that the sample at the bottom can be placed as close to the bottom of the jacket as possible to allow for the best cooling. This versatile design allows for adjustment for different samples. The Pu measurements are done with a sealed brass container to prevent Pu contamination. These containers contain a 14-DIP plug that plugs into the bottom of the probe. But these containers are also larger than a standard 14-pin DIP socket that might contain a different sample, so allowing for adjustment of the length of the probe provides excellent advantages. This design also allows us to have a connector at the center of the cap, reducing the overall cap diameter by several inches, since preventing a connector at the center would also destroy the symmetry.

The end of the probe involved a fairly unique design as well. The probe needs to be fitted with a female 14-pin DIP connector for connection to the brass containers for Pu, or for any other male DIP connector in which a sample is mounted. The solution that was devised involves a G10 fitting that has several components to it.

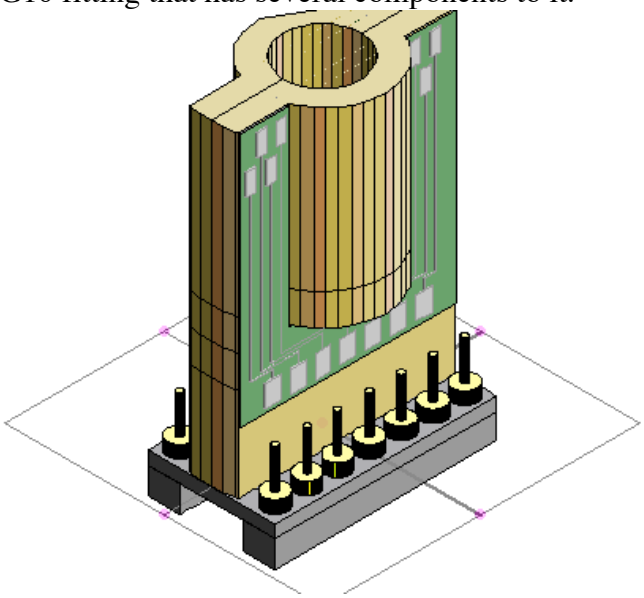

Fig. 6 – G10 fitting with DIP connector

The drawing is in the appendix. The DIP connector is a recessed Augut connector with through-holes for screws, so the DIP connector can be screwed to the bottom of the G10 fitting allowing it to be removed and replaced. The top of the fitting has a hole to accept the 1/4" pipe that is secured with set-screws. Set-screws were employed rather than epoxy to again make parts removable and replaceable. The flat sides of the fitting were made that way to allow the fixture of a small PC board such as shown in the figure. The PC Board is optional since the wiring can be done directly to the pins of the DIP connector, but if there were a necessity for circuitry, solder-pads at the top could be used to soldering to the wires, while pads the bottom would make connections to the DIP connector. The connections to the DIP connector are more difficult, but would only have to be done once, while the connection to the wires at the top are very versatile and could be changed as needed. For the measurements in this paper, the PC Board was not used and wiring done directly to the DIP connector.

Further modifications were made to this G10 disk for its use. A small hole was drilled lengthwise through the section immediately below the pipe's hole through which a copper rod was inserted. Around the rod was wound a 50 Ω length of manganen wire to be the probe's heater. Copper braids were screwed into the end of the rod and wound down around the bottom of the fitting to provide excellent thermal contact with the sample and with the ^{3}He. The G10 fitting provided an excellent solution to the design of the bottom of the probe that was easy to put together and is easily serviceable.

Testing of the probe showed positive results. It didn't' collapse when cooled to ^{4}He temperatures, and was leak tight when all sections tested with a helium leak detector.

Resistivity Measurements

The sample used for the resistivity measurements, had the following structure in the *z*-direction.

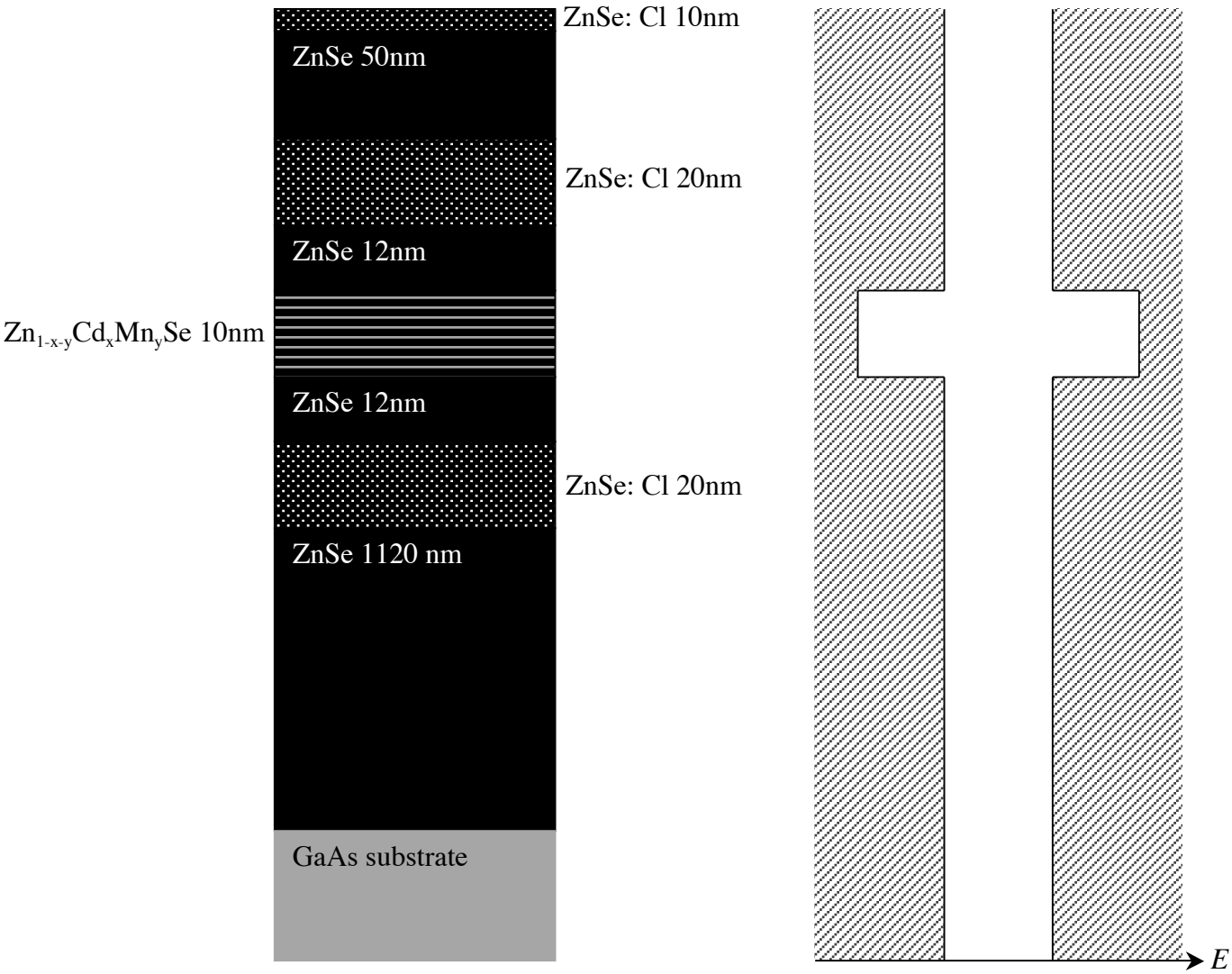

Fig. 7 – Vertical profile of the sample

Next to the profile of the sample is a chart of the band-gap energy as a function of *z*. The ZnSe has a specific band-gap energy. Some of the layers of ZnSe are doped with Chlorine, which has one more valence electron than Selenium, so it adds some electrons to the lattice structure. These electrons can be excited up into the bandgap by passing a current through the sample. When the electrons reach the potential well created by the layer with Cd and Mn in it, the electrons fall into that bandgap and are confined to a quantum well. The size of the quantum well is chosen to allow the wave function of the conduction electrons to only permit a single mode in the *z*-direction. Thus, the electrons

are confined in the z-direction, and a truly 2-dimensional sample is obtained, where electrons are free to move throughout the band-gap in the vertical quantum well.

The top-view of the sample looks like this

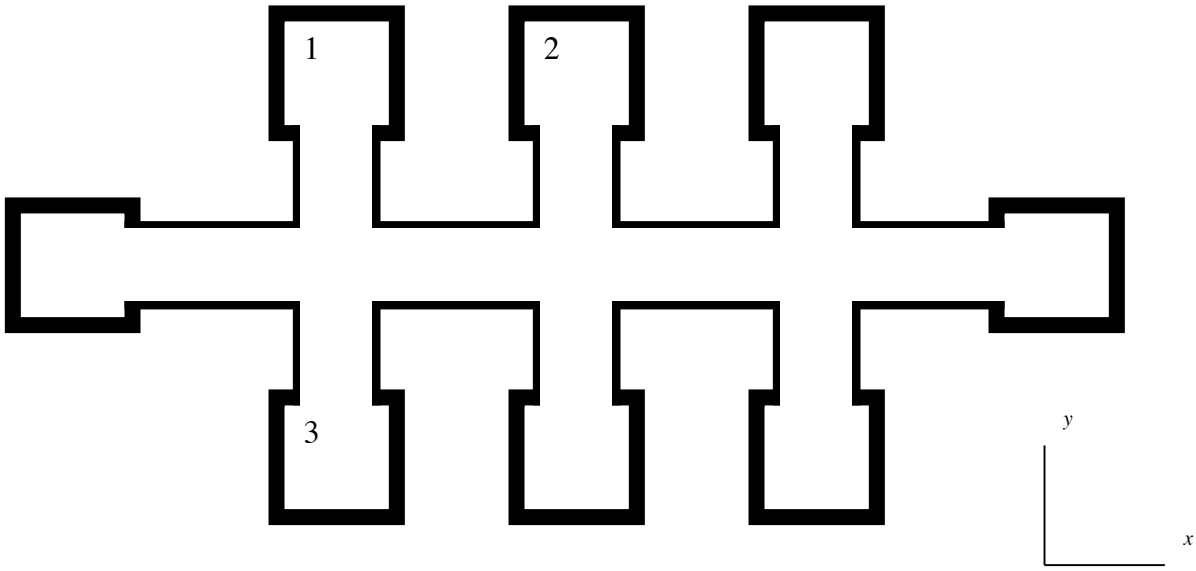

Fig. 8 – Shape of the sample

Current is applied in the x-direction. By reading the voltage between two points in the horizontal direction, such as from bars 1 and 2, the resistance between them can be inferred. In two dimensions, the resistance is directly proportional to the resistivity so we can obtain a measurement of the resistivity in the x-direction when the field is applied in the x-direction. Figure 9 shows the graph of $\square_{xx}$ for various field magnitudes.

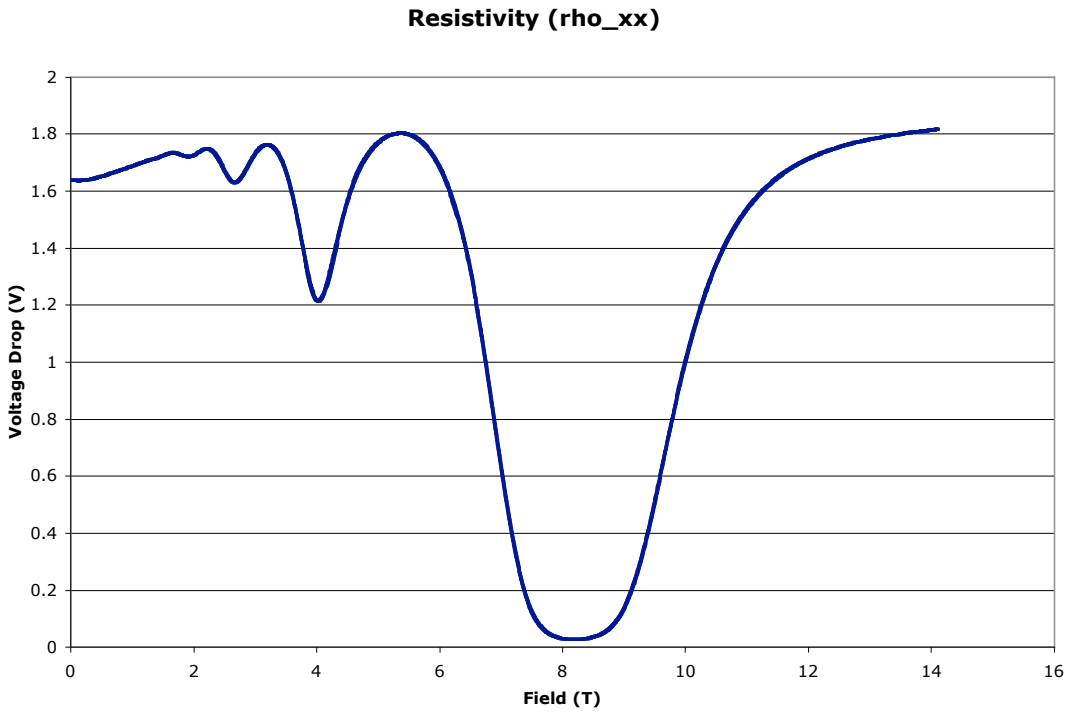

Fig. 9 – Resistivity (inferred through voltage drop for a constant current)

Notice the humps in the graph. In the presence of a magnetic field, Landau-levels in the density of states emerge so that the sample possesses a varying density of states that can be approximately modeled as in Figure 10

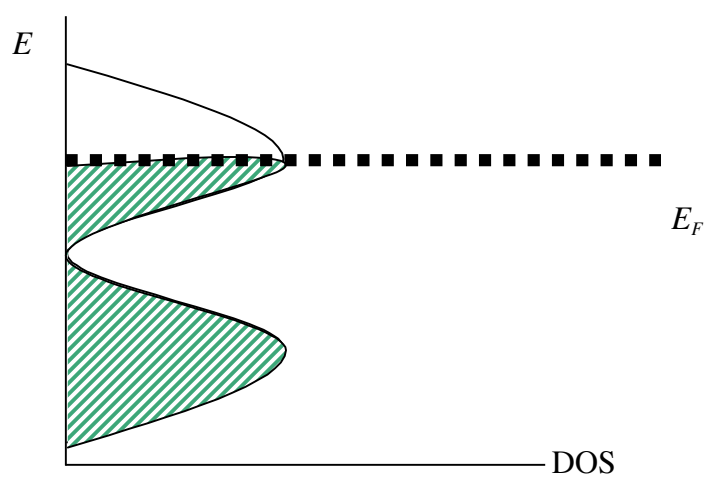

Fig. 10 – Density of states

As the intensity of the magnetic field changes, so does the Fermi energy of the particles due to spin-interactions with the magnetic field, most notably the precession of the particles' spin. When the Fermi energy puts the system at a maximum density of states, as in Fig. 10, there are many available states immediately above the Fermi energy for the electrons to be excited to by a current, making conduction of current possible. Thus, the

conductivity of the sample will be higher. When the Fermi energy reaches a minimum, there are only a few states that are excitable above the Fermi energy to allow conduction, and thus the conductivity will be quite low. Inversion of the conductivity tensor yields the resistivity tensor.

$$\bar{\sigma} = \begin{vmatrix} \sigma_{xx} & \sigma_{xy} \\ \sigma_{yx} & \sigma_{yy} \end{vmatrix} = \begin{vmatrix} \sigma_{xx} & \sigma_{xy} \\ -\sigma_{xy} & \sigma_{xx} \end{vmatrix}$$

$$\bar{\rho} = \frac{1}{\sigma_{xx}^2 + \sigma_{xy}^2} \begin{vmatrix} \sigma_{xx} & -\sigma_{xy} \\ \sigma_{xy} & \sigma_{xx} \end{vmatrix}$$

$$\rho_{xx} = \frac{\sigma_{xx}}{\sigma_{xx}^2 + \sigma_{xy}^2}$$

The diagonal elements of the conductivity tensor are equivalent because this is an isotropic sample. Sending current through bars 1 and 3, for example, would result in the same conductivity. The off-diagonal elements are non-zero because of the Hall effect, as will be explained soon. Because of the non-zero off-diagonal elements of the conductivity tensor, ρ_{xx} does not blow up as σ_{xx} goes to zero, instead, the resistivity also goes to zero. Similarly, as σ_{xx} gets very large, compared to σ_{xy}, the resistivity also goes to zero. These effects result in the graph of Figure 9.

Quantum Hall Effect

The Hall effect classically can be explained with the Lorentz force law.

$$\mathbf{F} = q\mathbf{v} \times \mathbf{B}$$

In an electric current, either electrons or electron holes are traveling and have a velocity. In the presence of a magnetic field, they will feel the Lorentz force forcing them in a direction perpendicular to their velocity and to the magnetic field. In a 2-dimensional region, this will result in a secondary current flowing perpendicular to the original current. Due to the sample's resistance, a potential will develop in *both* directions, not just the direction of the original current flow.

The Hall effect also makes it possible to determine whether or not the current carriers are positive or negative. Given a test current set up in the $+x$-direction and a magnetic field in the $+z$-direction, the charge carriers will be forced in the $-y$-direction, regardless of whether or not they are electrons or holes, due to the dependence of the force on the sign of the charge carriers and the direction of travel of the charge carriers. With both carriers forced in the same direction, the potential measured for holes will be opposite that measured for electrons.

For this reason, in the presence of a magnetic field, the off-diagonal components of the conductivity become non-zero. The Hall effect becomes quantized due to the disorder in the system.

Successful graphs of the Hall effect were not obtained in time for my departure due to incorrect wiring to the sample.

Conclusions

The probe designed and constructed in this study has thus far proven to be very effective. The probe met all of its goals and was able to successfully carry out magnetotransport measurements of the ZnSe/ZnCdMnSe sample. The probe is already scheduled for more measurements on the current sample as well as use in measurements on Plutonium samples. Observation of the Hall effect on resistivity was carried out successfully, but more time is needed for observation of the quantum hall effect. My understanding of condensed matter physics is limited, but experimentation with this probe and this sample has been instructive.

Appendix

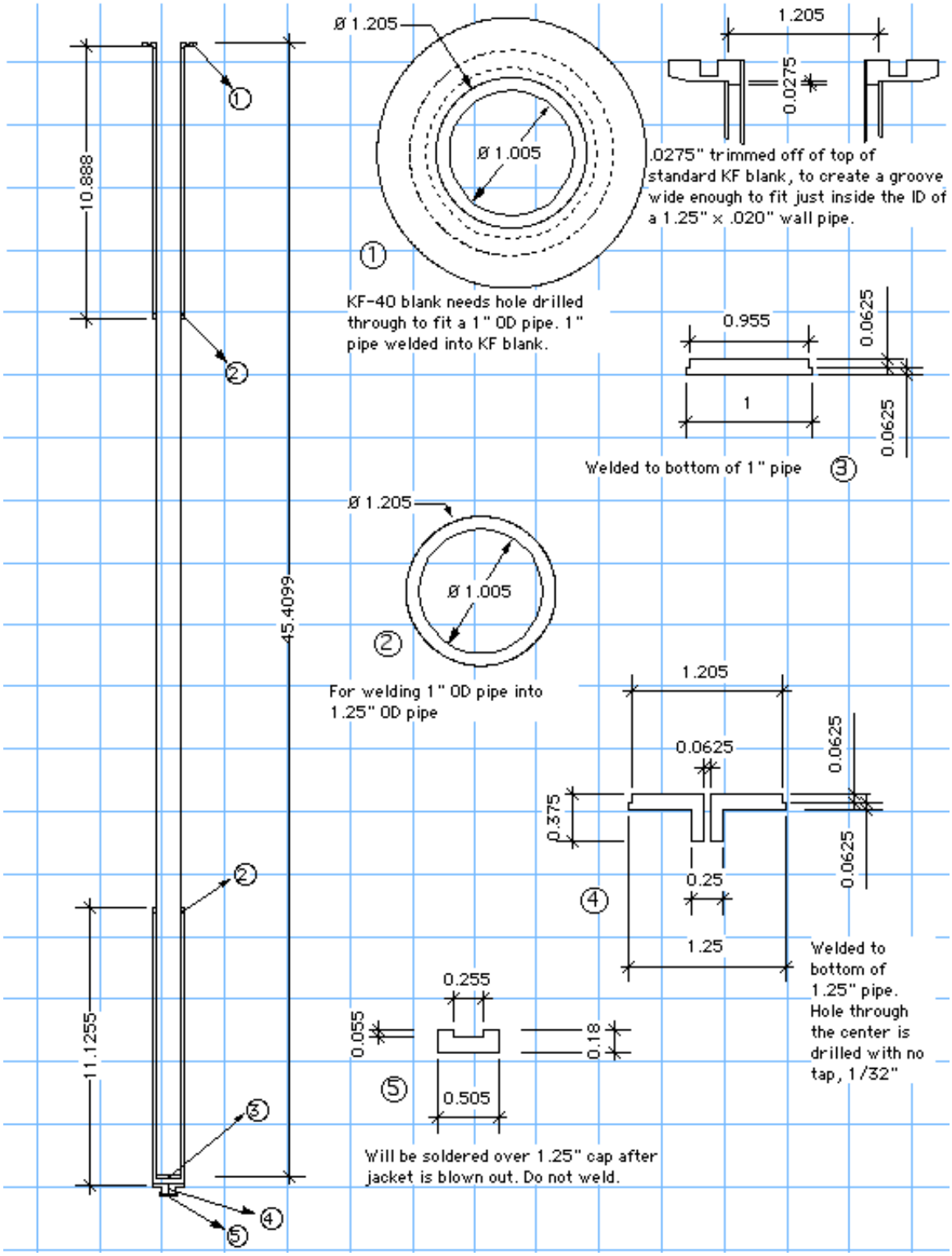

Dwg. 1 – Jacket (^{3}He refrigerator)

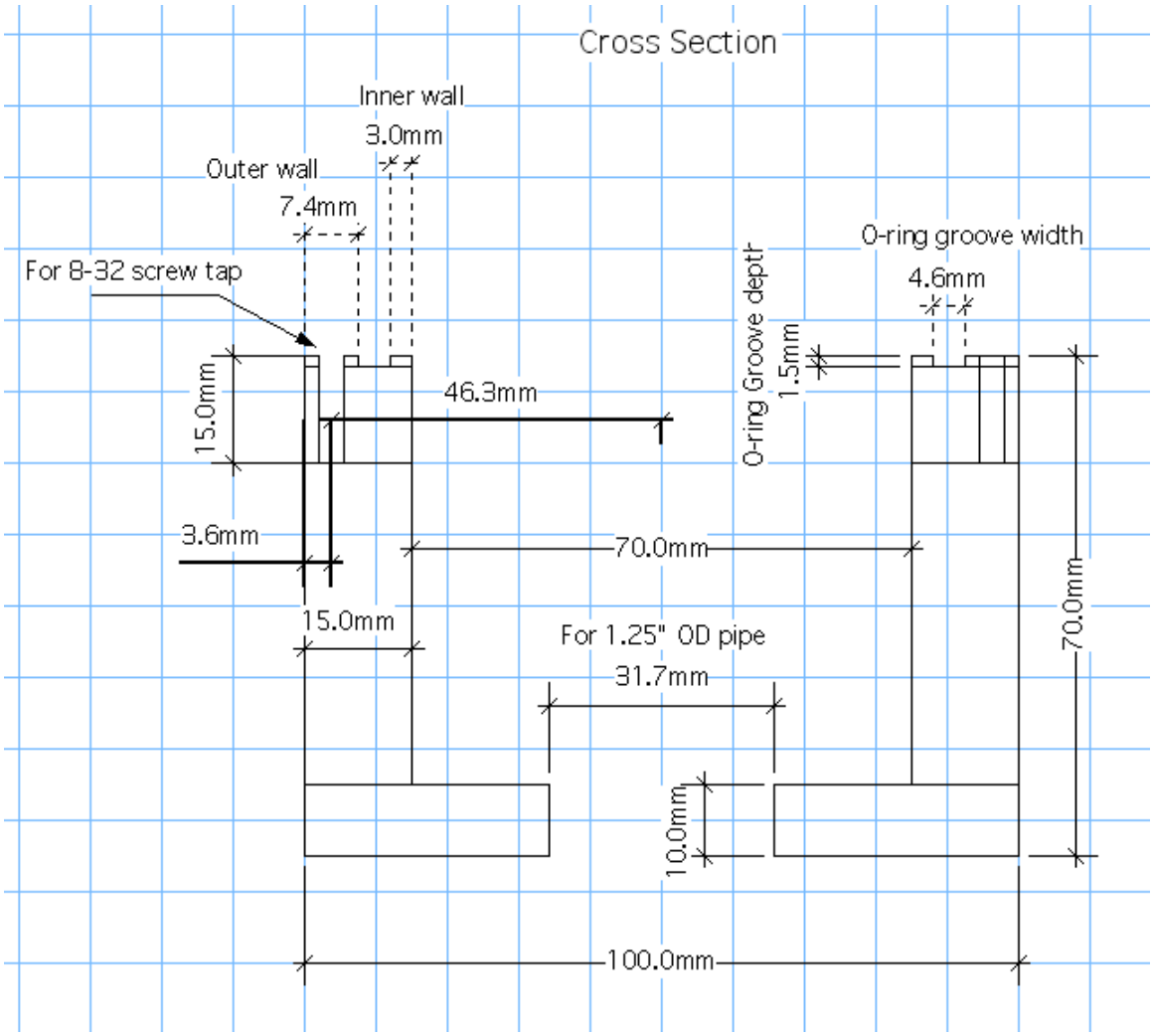

Dwg. 2 – Head of the probe

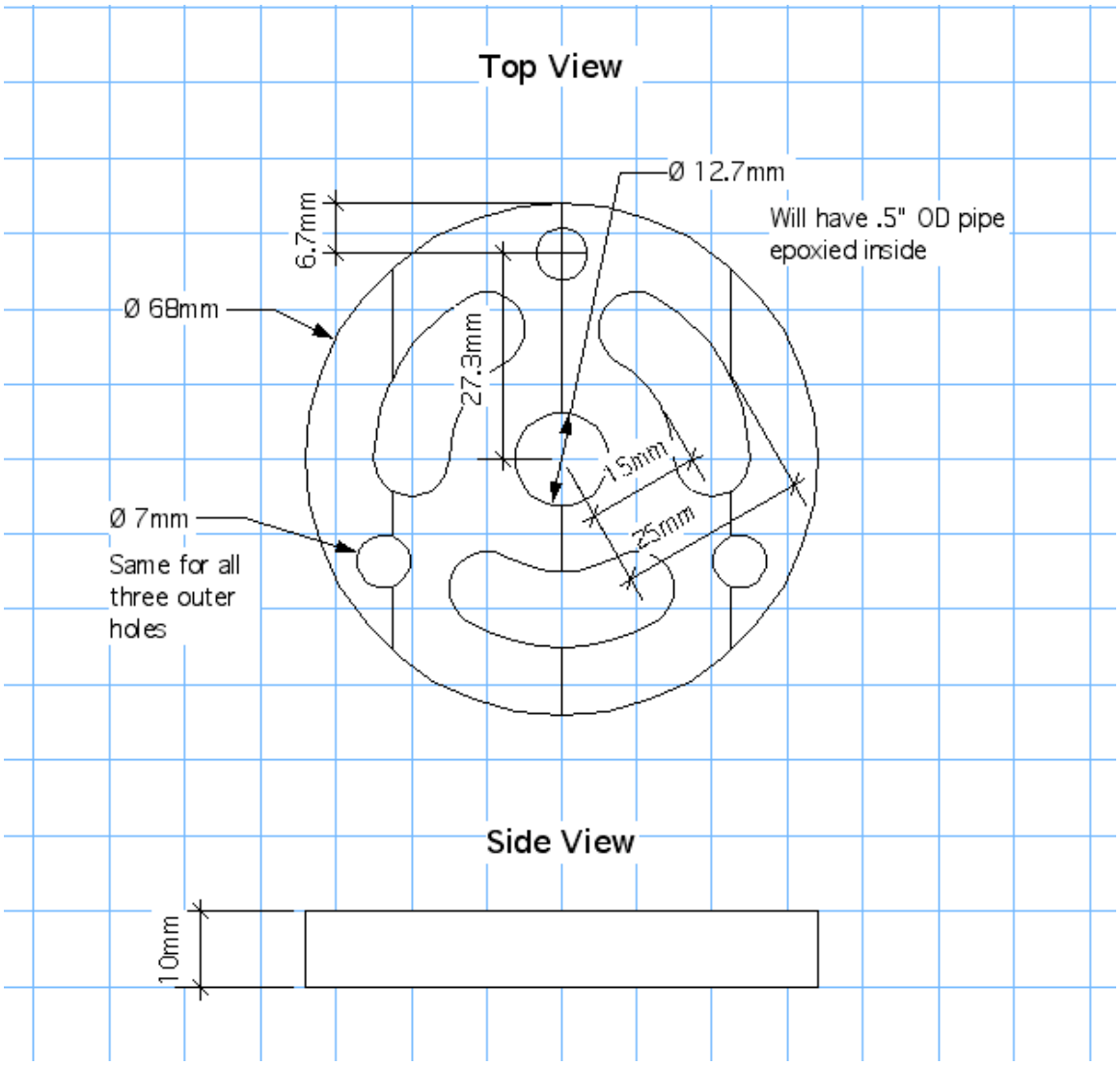

Dwg. 3 – G10 disk for securing pipe

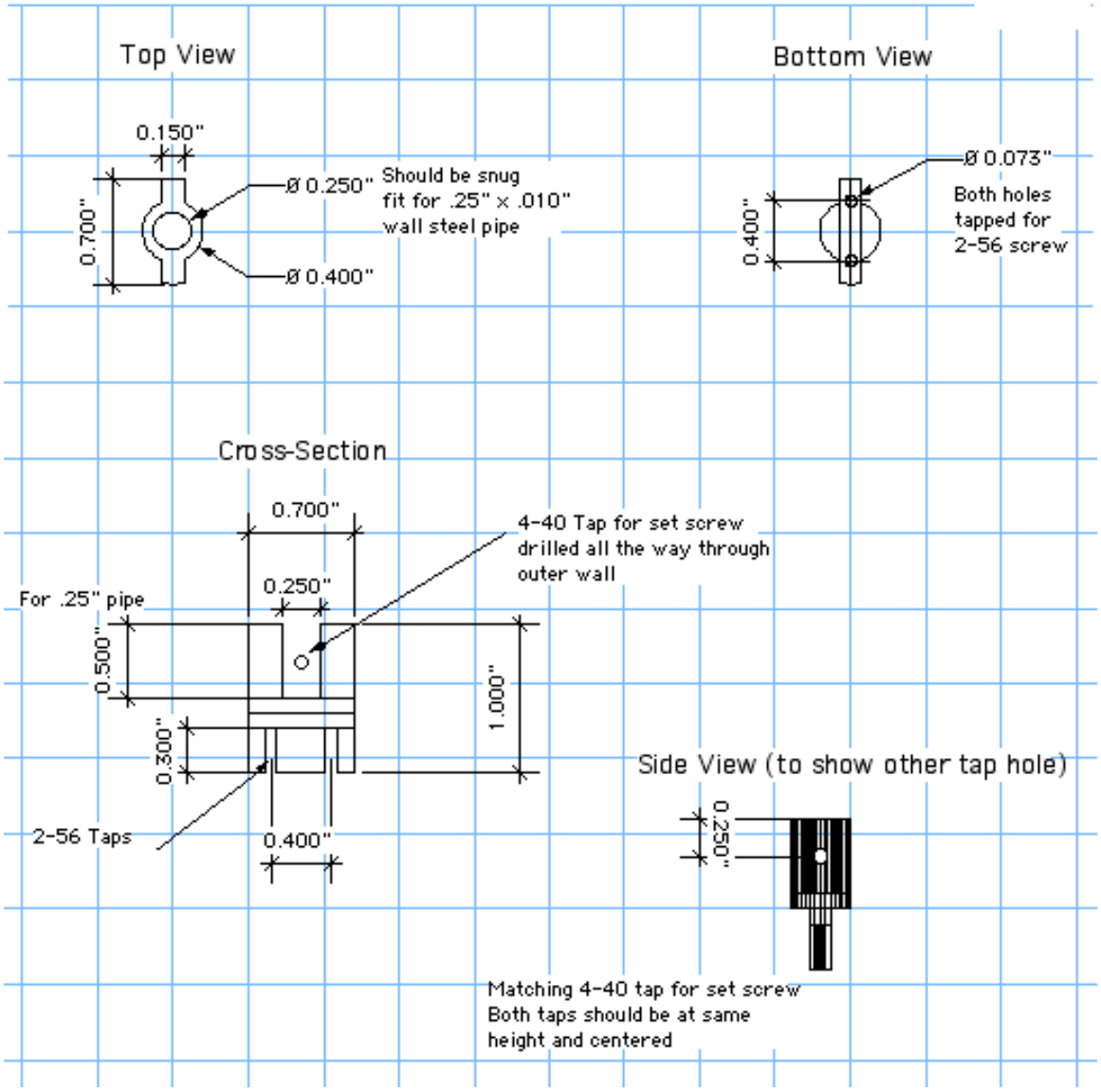

Dwg. 4 – G10 DIP fitting