Thermodynamic Properties at Low Temperatures

Evan Goetz, University of Washington, Physics and Astronomy

Abstract

This experiment focuses on the ability to easily measure the specific heat of a variety of solid materials at extremely low temperatures and high magnetic fields. Heat is applied by a sinusoidal alternating current signal with an increasing direct current offset. The offset provides the heat necessary to bring a sample above its phase transition temperature, and allows study on a wide array of samples. By this method, the specific heat is inversely proportional to the resulting equilibrium temperature signal. Here we consider high purity lead for the relatively high phase transition temperature and high specific heat to show the simplicity and power of this new experimental technique.

Introduction

Low temperature calorimetric measurements are a key property in solid-state physics because it is a figure of how phonons and electrons move in a material. Swapping samples in current calorimetric equipment is laborious and very delicate, and the amount of heat and time required obtaining accurate heat capacity measurements is often complicated. Current automated systems are costly and are not practical for experimenters with a small budget. In this new approach these aspects are taken into account to find a faster, easier and cheaper way to measure the heat capacity for a variety of compounds. Here the compound we used was high purity lead (Pb). Further studies will eventually lead to the study of the heavy fermion compound UBe_{13}. Lead is used as a simple element to test the calorimeter for accuracy with current measurements because the phase transition takes place at 7.19 K, above the boiling point of liquid helium that was used to cool the sample.

Traditional methods also rely on the sample being very large, which in turn requires larger equipment and longer heating times. In this method, the sample size is very small, on the order of less than 1 mm^3. The trade-off for having such a small sample is that relatively small amounts of heat can cause too much noise in the system, which, as of now, still needs to be addressed. Nonetheless, this approach has its advantages to traditional techniques of measuring heat capacity.

Theory

In a purely DC measurement setting one could measure the heat capacity using the equation dQ = C*dT. However, there is an extreme amount of noise using this method. The amplitude of the AC signal of a sample coupled to a

thermometer, heater, and bath can be expressed as a differential equation of the form (1),

$$T_{ac} = dQ_0/dt(1/2\omega C)[1+1/(\omega^2\tau_1^2) + \omega^2\tau_2^2 + (2K_b/3K_s)]^{-1/2}$$

where dQ_0/dt is the change in heat or the power input, τ_1 is the sample to bath relaxation time, τ_2 are the time constants of the heater, thermometer and sample added together in quadrature, C is heat capacity, ω is the period of the AC signal, and $2K_b/3K_s$ is a thermal diffusivity constant which for our purposes is considered to be negligible. At low frequencies, the $1/(\omega^2\tau_1^2)$ term dominates and the other terms are considered to be negligible. Low frequencies are used in order for the sample to stay in equilibrium with the heater and thermometer. If a frequency that is too high is used, then the sample will merely heat and there is almost no signal. T_{ac} is proportional to dV, the change in voltage and measured using a lock-in amplifier. We can write for the thermometer (2)

$$dV/dT = I * dR/dT$$

where I is current and dR is change in resistance. Equation 1 can be approximated to the first order to determine heat capacity, C, at low AC frequencies. (3)

$$dT = dQ_0/dt(1/2\omega C)*(\omega\tau_1) = dQ_0/dt(\tau_1/2C)$$

Low frequencies are used in order for the sample to stay in equilibrium with the heater and thermometer. If a frequency that is too high is used, then the sample will merely heat and there is almost no signal. Rearranging to solve for C and replacing dV with equation 2 we obtain (4)

$$C = dQ_0/dt(\tau_1/2dT).$$

Using the well known formula for specific heat, dQ = m*c*dT, we can further simplify equation to solve for specific heat (5)

$$c = dQ_0/dt(\tau_1/2dT)/m$$

where m is the mass of the sample.

Experimental Methods

Building a completely new device that is easy to use yet powerful in nature takes some thought to decide on the appropriate materials. Since we are using small samples, we will need a small heater, and a smaller thermometer. By using the heater as a platform for the sample and the thermometer, it becomes a

relatively simple task of soldering and gluing the system onto a larger substrate. A black, 4x2 electronic connector does an excellent job for this task.

A small piece of paper was glued to the top of the connector so that the heater would not fall off. Next, the silver solder points on the aluminum oxide ceramic side of the 100 ohm heater were sanded off to eliminate possible shorts in the electric circuit. On the ruthenium oxide side of the heater, two manganin wires were soldered to either side that was then connected to two pins on the connector. The heater was then epoxied to the paper.

Next, the 2000 ohm ruthenium oxide thermometer was attached to the heater (aluminum oxide side down) using Stycast 1266. Once the Stycast had cured 2 manganin wires were soldered to either side of the thermometer and then soldered to two more pins on the connector. Jumpers of copper wire were used to make connections to two more pins so that we could make four terminal measurements on the thermometer. The micro calorimeter setup is shown in figure 1.

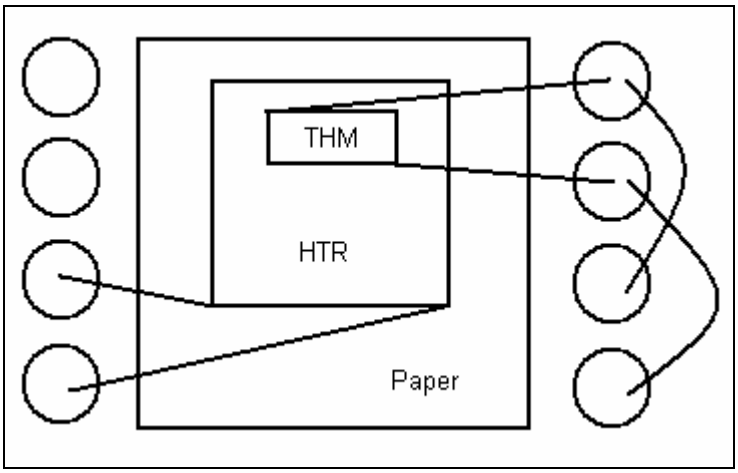

Figure 1. Calorimeter setup on a 4x2 electronic connector. Resistance across the heater at room temperature is approximately 100 ohms and across the thermometer is approximately 2000 ohms at room temperature.

To connect the calorimeter to a probe a second 4x2 connector was screwed to the bottom of a standard straight probe with 19 pin connectors at the top. Manganin wire jumpers were soldered to the pins to allow connections to be made to the 19 pin connector wires. At this point, the wires were wrapped in Teflon tape and the probe put into a vacuum canister. Theoretically, low temperature heat capacity measurements should be done in a very good vacuum, but the downside is the sample can then only cool by radiation. If a sample has low thermal diffusivity ability, than this can be a problem because it takes too long to cool the sample back down. Therefore, helium exchange gas can be used in small quantities to act as a heat sink when the probe is immersed in liquid helium.

Since this system has not yet been attempted, a calibration with no sample was needed to see how much current would be required to raise the temperature a certain amount. During this calibration, only DC was used since

the DC offset would be doing the main heating during the experiment. Figure 2 shows the change in resistance of the 2000 ohm thermometer as a function of time. Note the characteristic heating and cooling time for each current value.

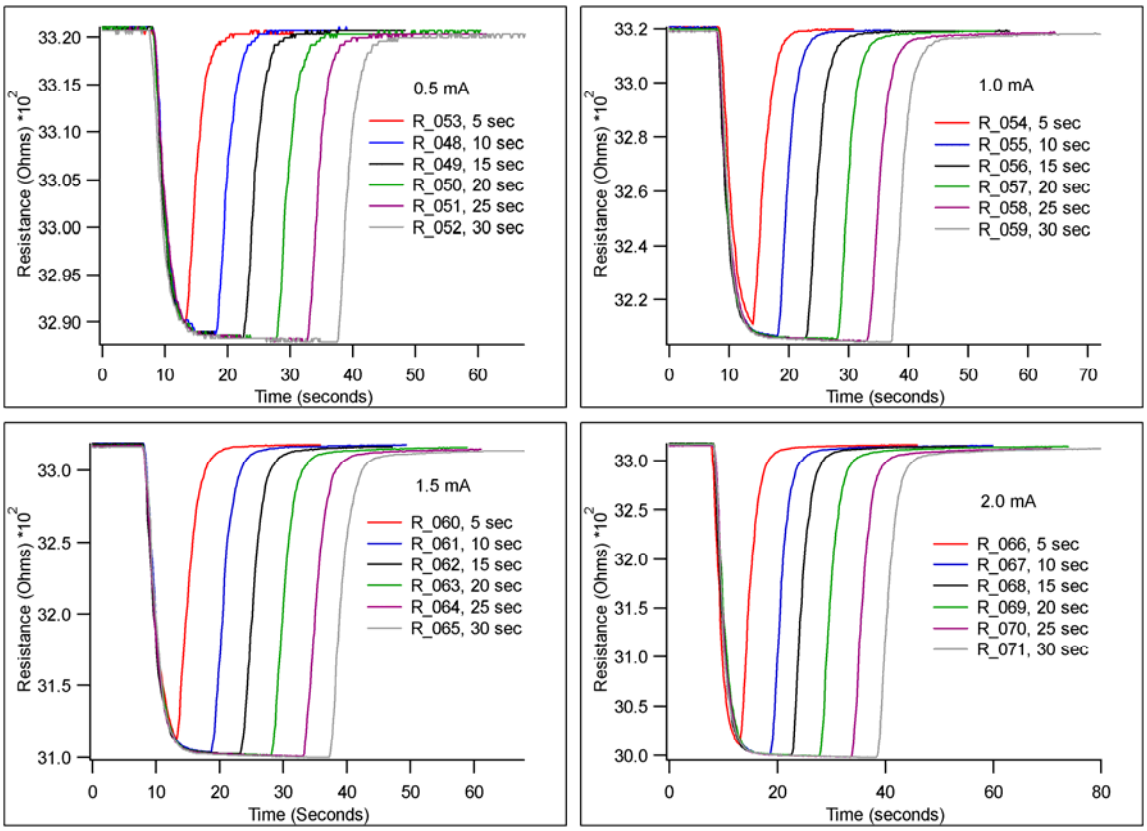

Figure 2. Heating and cooling of the system using DC and no AC.

Now that there was a way to lower the temperature by a specific amount, we could begin experimenting with an actual sample. Lead of purity 99.9999 percent was used because the phase transition is above the boiling point of liquid helium. The sample of lead used was placed directly on top of the heater and next to the thermometer using thermal compound grease. This was advantageous to use of other glues because the thermal conductivity is very high. Since our sample weighed a mere .021 grams the compound was all that was needed to hold it in place against the heater.

Coupling an AC signal with a DC offset allows us to change the temperature to determine the specific heat over a wide range of temperatures. In order to measure the heat capacity, though, we need to measure the heat pulses we put into our sample that means that we need to read a second harmonic of our change in voltage since power is the square of current ($P = I^2 * R$). For this we used a lock-in amplifier set to the second harmonic. Figure 3 shows the setup to measure the heat capacity of a sample.

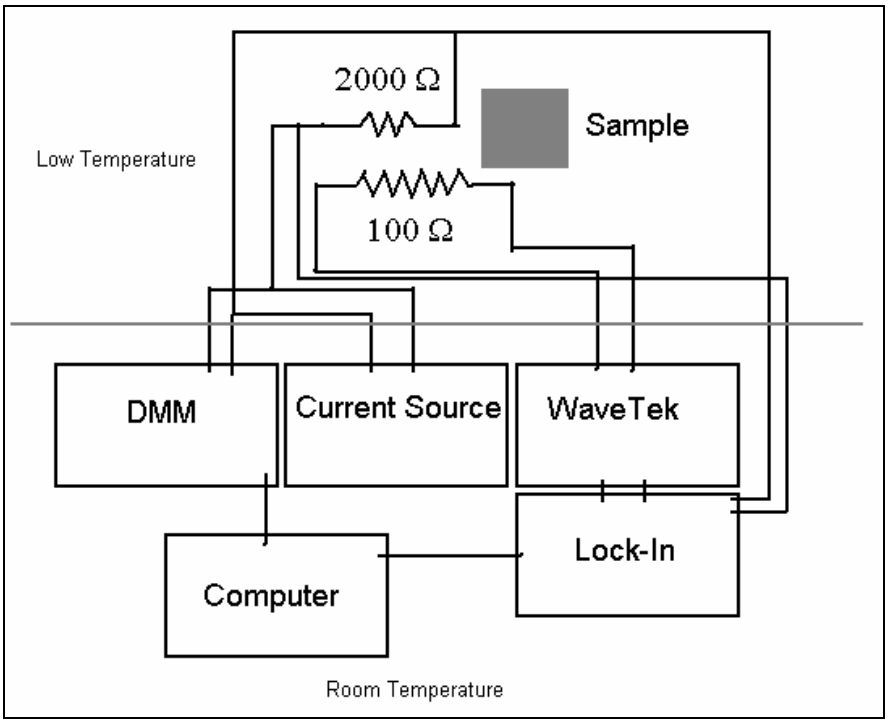

Figure 3. A schematic diagram of the experimental setup.

Finally, the last thing that was needed before we could determine actual the actual specific heat of a sample of lead was a calibration curve to determine the resistance of the 2000 ohm thermometer at a specific temperature so that data could be interpreted in Kelvin rather than a change in resistance. This was accomplished by pumping on the vacuum jacket until a sufficient vacuum resulted. The probe was then slowly immersed in liquid helium. Once thermal equilibrium was reached, a rubber hose, which helium gas was allowed to diffuse into was attached to the vacuum jacket valve. Helium exchange gas then was allowed to slowly diffuse into the jacket to bring the temperature down to 4.2 K.

Results

The heat capacity of lead was measured between 4.2 K and approximately 14 K, through the superconducting phase transition. Many important physical aspects can be interpreted by measuring thermodynamic properties of compounds. The data presented has an inherent flaw: the signal to noise ratio is quite low. This will be overcome in the future with later experiments.

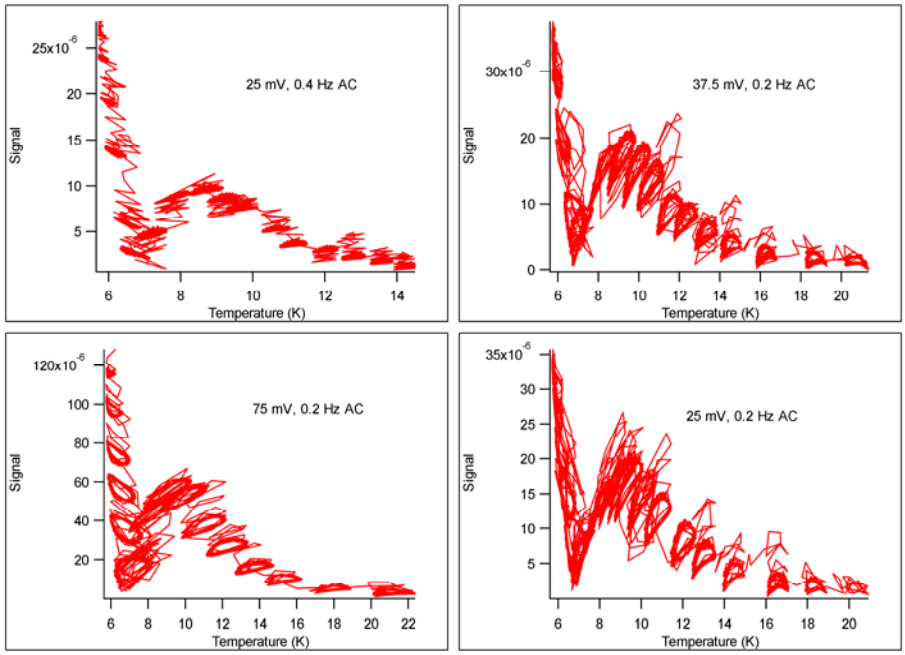

Figure 4. This shows the signal from the lock-in (dV) versus temperature for varying frequencies and amplitudes of AC signal.

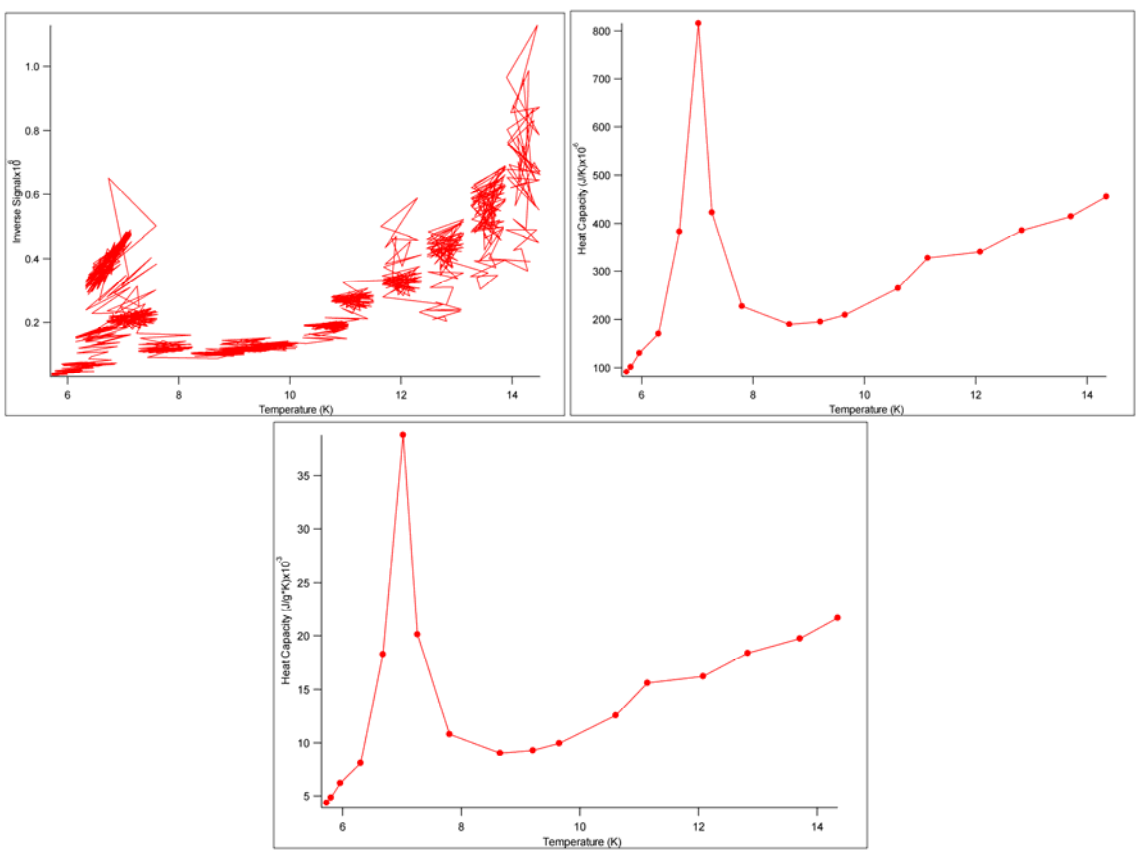

Figure 5. Specific heat measurements for high purity lead. The left graph is the inverse of the data, but the data points are assumed to be at the center of mass of each “data circle”. Thus we

plot the center of mass in the right graph and calculate heat capacity. The bottom graph is specific heat calculated from heat capacity.

It is easy to see that at the phase transition of lead (7.19 K) the specific heat suddenly spikes to a much greater value that what it would have been had it not gone through a phase transition.

Conclusions

According to the BCS Theory, the resultant peak in specific heat at the phase transition is due to an energy gap that opens up in the electron bands of the lead. This band gap occurs in all metals at the critical temperature. The BCS Theory also states that the curve of the heat capacity can be approximated at low temperatures by the effective mass of the electrons, γ, by $C=\gamma T$ where T is temperature. At higher temperatures, the heat capacity is approximated by $C = \gamma T + \beta T^3$ which is due to phonon interactions. Past the critical temperature the heat capacity decreases exponentially with temperature: (6)

$$C \sim \exp\left[-\Delta(0)/k_B T\right]$$

Where $\Delta(0) = V\Sigma u_k v_k$ at 0 K where V is the potential between two electrons, u_k and v_k are the probability that the electron pairs will be one spin vector up and the other down and the probability of an empty state, respectively.

The BCS Theory also says that the ratio $\Delta C/\gamma T_c = 1.52$. In this experiment, our ratio is calculated 5.65. There are many reasons for error, but the two biggest are not all metals follow the BCS Theory exactly, and the second is my system still has a large uncertainties due to several complications such as low signal to noise ratio and there is a component of the signal that actually comes from the heat capacity of the heater and thermometer itself. Further research should be looked into eliminating other heat sinks in the system. In this experiment, the biggest source of a heat sink was the helium exchange gas. Given more research, this new technique could prove an invaluable asset as a cheap and easy yet amazingly powerful technique to make thermodynamic measurements.

Acknowledgements

I would like to thank Prof. James Brooks of the National High Magnetic Field Laboratory, Florida State University for his advice and being a wonderful mentor. I would also like to thank David Graf, M.S. for his hours of time he spent helping with calibration and general experimental advice. Thanks also to the Research Experiences for Undergraduates of the NHMFL and the National Science Foundation.

References

Cyrot, Michael and Pavuna, Davor. *Introduction to Superconductivity and High T_c Materials*. World Scientific Publishing Co. Pte. Ltd. 1992.

Sullivan, Paul F. and Seidel, G. "Steady-State, ac-Temperature Calorimetry." *Physical Review*, Volume 173, Number 3, September 1968. pp. 679-685.